Owner Manual

Version 1.0

December 22, 2023

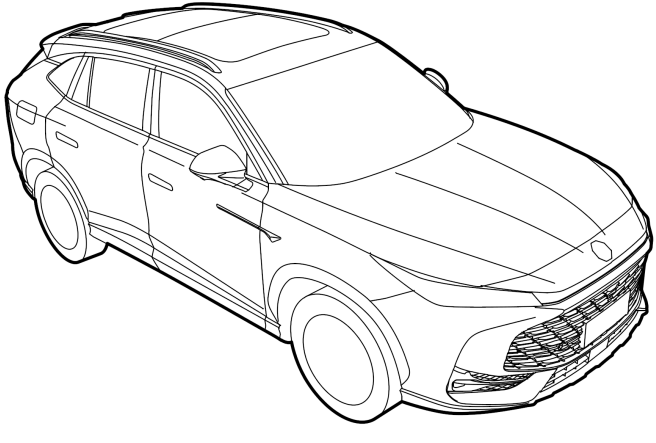

CONTENTS

Owner Manual 1

1 Instructions Before Using the Vehicle 19

Introduction 20

Owner's Handbook 20

Announcement 20

Privacy Statement 20

Symbols Used 22

Vehicle Identification Information 23

Vehicle Identification Marking 23

Location of Vehicle Identification Plate 24

Instructions for Use of Hybrid Vehicle* 25

Ambient temperature for using vehicle 25

Instructions for recycling high-voltage battery packs 25

Precautions in the Event of an Accident 26

High Voltage System 28

Crash Outage Control 31

Intelligent Charging 31

Charging and Discharging Requirements* 32

Charging Your Vehicle at Home 33
Charging Pile 33
Home Charging Guide 33
Medical Advice Relating To Charging Operation 34
Charging Identification Number* 36
Charging Operation 38
Charging Information 39
Equalisation Charging 39
Charging Time 39
Discharging 41
Battery Information Security 43
High-voltage Battery Pack 43
12V Battery 44
Portable batteries (button, cylindrical, built-in batteries, etc.) 44
2 Brief Introduction to Vehicle Functions 45
Instrument Pack 47
Instrument Information Display Operation 47
Instrument Pack - Type A (PHEV)* 48
Instrument Pack - Type B (Fuel)* 50

CONTENTS

Instrument Pack - Type C (HEV)* 52
Warning Message 54
Warning Lamps and Indicators 55
Lights and Switches 70
Master Light Switch 70
Headlamp Levelling 72
Switching between High Beam and Low Beam Headlamps 73
Turn Signal Lamp 75
Rear Fog Lamps 76
Front Fog Lamps* 76
Hazard Warning Lamp 76
Wipers and Washers 77
Front Windscreen Wiper and Washer Operation 77
Rear Window Wiper and Washer Operation 79
Horn 80
Rearview Mirrors 81
Exterior Rearview Mirrors 81
Interior Rearview Mirrors 84
Sunroof * 85

Instructions for Use 85
Sunroof Operation 86
Windows 90
Power Operated Window Switch 90
Window Operation 91
Sunvisor 93
Interior Lighting 94
Front Interior Lamp - Type A 94
Front Interior Lamp - Type B 95
Rear Interior Lamp 96
Power Socket 97
Front Console Power Socket 97
Rear Power Socket 98
Mobile Phone Wireless Charging* 99
Wireless Charging of Mobile Phones 99
Storage Devices 101
Instructions for Use 101
Glove Box 101
Storage Box 102

CONTENTS

Glasses Box* 103

Cup Holder 104

Centre Console Cup Holder 104

Rear Armrest and Rear Cup Holder 104

3 Preparations for Trip 105

Keys 106

Overview 106

Replacing the Smart Key Battery 108

Anti-theft Systems 110

Engine Immobiliser 110

Body Anti-theft System 110

Alcolock* 115

Tailgate 116

Manual Tailgate * 116

Electric Tailgate * 117

Emergency Tailgate Release 120

Load Carrying 122

Load Space 122

Internal Loading 122
Towing 123
Towing Function 123
Fuel System 128
Fuel Requirements 128
Fuel Filler 129
Refuelling 131
Steering System Adjustment 133
Steering Wheel Position Adjustment 133
Electric Power Steering 133
Steering Wheel Heating* 134
4 Drive the Vehicle 135
Starting and Stopping Engine 136
Start Switch 136
Starting Power System 137
OFF 138
Economical and Environmental Driving 139
Running-in 139

CONTENTS

Environment Protection 139
Economic Driving 139
Driving in Special Environment 140
Check and Service 142
Automatic Transmission* **143**
Instructions for Use 143
Gear Shift 143
Protection Mode 146
Dual Clutch Automatic Transmission* **148**
Instructions for Use 148
Gear Shift 148
Protection Mode 151
Manual Transmission* **153**
Electric Drive Unit* **155**
Instructions for Use 155
Gear Shift 155
Protection Mode 157
Driving Mode* **160**
Kinetic Energy Recovery Mode* **161**

Power Source Setting* **162**
Electronic Parking Brake (EPB) **163**
Parking Brake System - Electronic Parking Brake (EPB) 163
Service Brake **166**
Vacuum Assisted Hydraulic Brake System* 166
Integrated Braking System (IBS)* 167
5 Leave Home Safe **169**
Seat Belt **170**
Protection Provided by Seat Belts 171
How to Wear Seat Belts Properly 172
How Seat Belts should be worn on children 176
Seat Belt Pre-tensioners 178
Seat Belt Checks, Maintenance and Replacement 180
Airbags **182**
Overview 182
Airbag Deployment 183
Conditions in Which Airbags Will Not Deploy 187
Service and Replacement of Airbags 189

CONTENTS

Child Restraints For UK Region **191**
Important Safety Instructions about Using Child Restraints 191
Fixing Child Restraints 195
Child Restraint Groups and Installation Position 198
Child Restraints for Other Region Except UK **202**
Important Safety Instructions about Using Child Restraints 202
Fixing Child Restraints 206
Child Restraint Groups and Installation Position 209
Child Proof Locks **212**
Body Stability Control System **213**
Antilock Brake System (ABS) **214**
Auxiliary Brake System (EBA) **215**
Electronic Brake Force Distribution (EBD) **216**
Auto Hold **217**
Hill Hold Control (HHC) **219**
Hill Descent Control (HDC) **220**
Active Rollover Protection (ARP) **223**
Emergency Braking Hazard Warning Strobe (HAZ) **224**

Pedestrian Alert Control System* **225**
Tyre Pressure Monitoring System (TPMS) **226**

6 Comfortable Experience **229**

Seat Adjustment **230**
Seat Positions and Backrest Angle State 230
Front Seats 231
Rear Seats 232
Headrest Operation 233
Seat Heating Function* 234
Driver's Seat Memory Function* 234
Driver Seat Welcome Function* 235

A/C Control Panel **237**
Control Panel 237
A/C On/Off Shortcut Button 237
Defrost/Demist Button 237
Heated Rear Window Button 237

Ventilation **239**
A/C Filter Element 240

CONTENTS

Vents 240

Intelligent Display 242

Main System Interface 242
Bluetooth Phone 243
Vehicle-Mobile Phone Interconnection 243
User* 244
Settings 244
Map and Navigation* 244
Entertainment 244

7 Intelligent Driver Assistance 247

Intelligent Driver Assistance Description 248

Intelligent Driver Assistance Disclaimer 248

Cameras and Radars 250

Driver Assistance Cameras 250
Driver Assistance Radars 253

Adaptive Cruise Control* 255

Adaptive Cruise Activation 255
Adaptive Cruise Target Following Distance Adjustment 258

Adaptive Cruise Target Speed Adjustment....258
Adaptive Cruise Pause....259
Automatic Deactivation of Adaptive Cruise....259
Adaptive Cruise Override....260
Adaptive Cruise Resume....260
Clearing Target Speed Memory....260
The ACC function is limited or does not work even if it is enabled in the following conditions:....260
Special Driving Environments....261
Intelligent Cruise Assist*....265
Intelligent Overspeed Alarm....269
Speed Limit Assist System....271
Constant Speed Cruise Control System*....276
Lane Keeping Assist....279
Forward Collision Assist*....283
Rear Driving Assistance System*....287
Turning On/Off the System....288
Blind Spot Assist....288
Rear Cross Traffic Assist....290
Rearward Collision Warning....292

CONTENTS

Door Open Warning 293

Ultrasonic Sensor Parking Assist 295

Ultrasonic Sensor Parking Assist 295

Reversing Assist System* 298

360 Around View Monitor* 299

Driver Monitoring System 301

8 Road Emergency Response 303

Hazard Warning Devices 304

Warning Triangle 304

Jump Start 305

eCall-SOS Emergency Assistance* 308

Vehicle Recovery 310

Vehicle Towing 310

Vehicle Transport 312

Wheel Replacement* 313

Spare Wheel 313

Tool identification 313

Wheel Replacement 314

Tyre Repair* **318**
Tyre Repair Tool 318
Tyre Repair 318
9 Maintenance **321**
Maintenance Description **322**
Regular Maintenance 322
Bonnet **326**
Opening the Bonnet 326
Closing the Bonnet 326
Bonnet Open Alarm 326
Engine Compartment **327**
Engine Oil **331**
Engine Oil 331
Engine Oil Check and Refill 332
Engine Oil Specification 333
Cooling System **334**
Coolant Check and Top Up 334
Coolant Specification 334

CONTENTS

Catalytic Converter **335**
Bottom protection layer 335
Brake Friction Pair and Brake Fluid **337**
Brake Fluid Check and Top Up 337
Fuse Replacement **339**
Fuse 339
Passenger Compartment Fuse Box 340
Front Compartment Fuse Box 342
12V Battery Maintenance and Replacement **347**
Battery Maintenance 347
Battery Replacement 348
Bulb Replacement **349**
Bulb Specification 349
High-voltage Battery Pack* **350**
Precautions and restricted conditions for use of battery 350
Washer **353**
Washer Fluid Check and Top Up 353
Washer Nozzles 354

Wipers **356**
Wiper Blades 356
Front Windscreen Wiper Blade Replacement* 357
Front Windscreen Wiper Blade Replacement* 358
Rear Window Wiper Blade Replacement 359
Tyres **360**
Overview 360
Tyre Inspection 362
Tyre Wear Indicators 363
Tyre Rotation 364
Snow Chain 365
Cleaning and Care **366**
Automobile External Care 366
Automobile Internal Care 372
10 Technical Data **375**
Technical Data Dimensions **376**
Complete Vehicle Mass Parameters **378**
Main Engine Parameters **379**

CONTENTS

Drive Motor Performance Parameters **380**
Parameters of High-voltage Battery Pack **381**
Battery pack type 1 (21kWh) 381
Battery pack type 2 (24kWh) 383
Battery pack type 3 (1.84kWh) 385
Dynamic Performance Parameters **387**
Recommended Fluids and Capacities **388**
Wheel Alignment (Unladen Condition) **391**
Wheels and Tyres **392**
Tyre Pressures (Cold) **393**
Gasoline Vehicle 393
PHEV/HEV 393

I

Instructions Before Using the Vehicle

Introduction 20

Vehicle Identification Information 23

*Instructions for Use of Hybrid Vehicle** 25

*Charging and Discharging Requirements** 32

Battery Information Security 43

Introduction

Owner's Handbook

This handbook describes all the standard features and functions of the vehicles within the model range. Some information may be inapplicable to your individual model.

If you have any questions about the operation and parameters of the vehicle, please contact a MG Authorised Repairer which will provide you with the best service.

The illustrations in the Owner's Handbook are for reference only.

A local Authorised Repairer in this manual refers to a MG Authorised Repairer.

The information contained in this handbook may vary slightly depending on the vehicle configuration, software version and sales regions.



Damage to the hearing system may occur if exposed to sound waves with power greater than 85 (eighty-five) decibels.

When you use the on-board audio system, it is recommended to control the volume reasonably. Excessive volume will interfere with the hearing system, which may harm your health and cause issues when driving safely.

Announcement

The strategy of our company is to make continuous improvements to the products, therefore, we reserve the right to make changes in the product without further notice after the handbook is issued.

This handbook includes up-to-date information as of its release. Except for personal injury caused by negligence of the manufacturer or MG Authorised Repairer, the manufacturer or MG Authorised Repairer shall not be liable for any error and its consequences, including property damage or personal injury.

Privacy Statement

According to the configuration, Your vehicle may be equipped with an onboard audio, visual & navigation system and an intelligent connectivity system that allows you to connect to your vehicle via our app on your mobile phone. In context with the provision of the intelligent connectivity system and the app, we process personal data.

We highly respect your privacy and personal information, and we will inform you of the following important information through the Privacy Notice. The latest version of the Privacy Notice can be found on your vehicle screen. If the Privacy Notice is not available to you on your vehicle screen, please read the privacy notice in your mobile app.

The contents of this notice may change from time to time, so you should review it periodically. Where possible, we will also contact you directly to notify you of any substantial changes.

Symbols Used

Warning



This warning symbol identifies procedures that must be followed precisely, or information that must be considered with great care, in order to reduce the risk of personal injury or serious damage to the car.

IMPORTANT

IMPORTANT
The statements stated here must be followed strictly, otherwise your car could be damaged.

Note

Note: This describes helpful information.



This symbol indicates parts described must be disposed of by authorised persons or bodies to protect the environment.

Asterisk

An asterisk (*) appearing after the title or the text, identifies features or items of equipment that are only fitted to some models, and may not be fitted on the vehicle your purchased.

Illustration Information



Identifies components being explained.



Identifies movement of components being explained.

Vehicle Identification Information

Vehicle Identification Marking

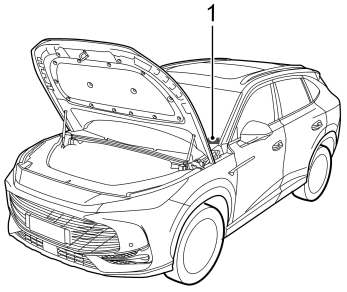

1 Vehicle Identification Number (VIN)

When communicating with an MG Authorised Repairer, always quote the Vehicle Identification Number (VIN) . If the engine or transmission is involved, it may be required to provide the identification numbers of these assemblies.

Vehicle Identification Number (VIN) Location

Vehicle Identification Number (VIN)

- On the floor under the driver seat;
- Stamped on the instrument panel visible through the bottom left hand corner of the windscreen;
- On the identification plate;
- On the inner side of the tailgate visible by opening the tailgate.

Note: The DLC of the vehicle is located above the driver side lower closure panel and the VIN information can be read using the approved MG diagnostic equipment.

Engine Number

Stamped on the front right of the cylinder block (View from the front of the engine).

Transmission Number

On the surface of the transmission housing in the engine compartment or on the surface of the transmission valve body cover. The transmission numbers of certain models are only visible by raising the vehicle, please contact an MG Authorised Repairer.

Location of Vehicle Identification Plate

The identification plate is located at the lower side of the B pillar. It contains information such as the manufacturing year and month, seat capacity, engine model, etc.

Instructions for Use of Hybrid Vehicle*

Ambient temperature for using vehicle

The working performance of the high-voltage battery pack fitted to your vehicle is related to the ambient temperature. This battery powers the vehicle power system and therefore it is recommended that where possible the vehicle should be used within the temperature range of -15℃~45℃ . This will ensure that the vehicle is in the optimum working state and help extend the service life of the high-voltage battery pack. Extremely high or low temperatures will affect the performance of the high-voltage battery pack and vehicle.

Instructions for recycling high-voltage battery packs

If you decide not to use the recommended MG Authorised Repairer to dispose of your high voltage battery, the responsibility of the consequences of environmental pollution or accidents must be bourne by the owner.

The high-voltage battery packs contain many lithium cells. Arbitrary disposal may cause pollution and harm to the environment. Therefore, they should be recycled and disposed by MG Authorised Repairers or designated cooperation units by observing the following information or requirements.

- Personnel: ONLY qualified personnel should dismantle the high-voltage battery pack;
- High-voltage safety: the high-voltage battery pack features high-voltage components such as lithium battery pack and high-voltage harness. DO NOT attempt to dismantle any component of this system, suitably trained professional staff must observe insulation safety protection before working on or near the high voltage system.
- Transportation requirements: The high-voltage battery pack is classified as a Category 9 hazardous material and must be transported by companies with relevant qualifications.
- Storage requirements: All high-voltage components (including the high-voltage battery pack) should be stored at room temperature and in a dry environment.

They must be kept away from dangerous sources, such as flammable objects, heat and water sources.

It is strongly recommended that the used high-voltage battery pack generated from vehicle scrappage, etc. should be disposed of by an MG Authorised Repairer. Please consult an MG Authorised Repairer for more details.

Precautions in the Event of an Accident



Ensure the vehicle is in P gear and the vehicle power system is OFF.



If any cables on the vehicle are exposed, in order to prevent electric shock or even death DO NOT make any contact with any cable.



If the vehicle catches fire but the fire is small and slow, a carbon dioxide extinguisher can be used to extinguish the fire. Please ensure this is only done if it is safe to do so and contact the fire services as soon as possible. If the fire is large and spreading quickly, immediately evacuate the vehicle and contact the fire services.



If the vehicle is involved in a collision and it cannot be restarted, the negative cable of the12V battery and Manual Service Disconnect (MSD) MUST be disconnected prior to rescue.

When the vehicle is completely or partially immersed in water, switch off the vehicle power system and evacuate the car immediately. The negative cable of 12V battery and Manual Service Disconnect (MSD) MUST be disconnected prior to rescue or as soon as the vehicle is refloated/removed from the water. Observe the water/vehicle for any abnormal signs such as excessive bubbles or noises, this may indicate battery short circuit issues. If no signs are evident, there should not be a shock risk from the bodywork and recovery can commence.

After the accident is resolved, please contact an MG Authorised Repairer for maintenance.

High Voltage System



All high voltage components have warning labels attached - please observe these warnings and any requirements when operating within or close to these areas.



ONLY qualified personnel should work on, or with, the high voltage system - there is danger of DEATH.

The high voltage system component layout is shown below:

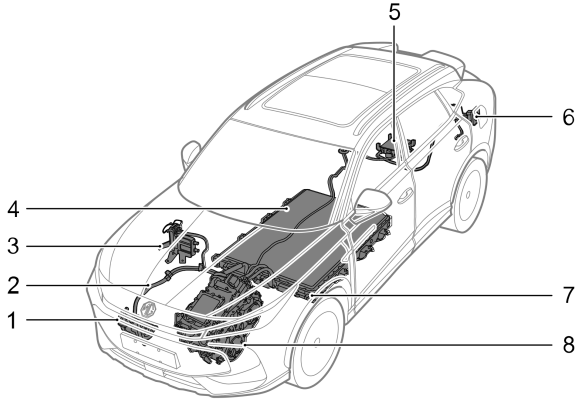

1 Electric A/C Compressor
2 High-voltage Harness
3 Electric Heater
4 High-voltage Battery Pack
5 Combined Charging Unit (CCU)
6 Charging Port
7 Manual Service Disconnect
8 Electric Drive Unit

The high voltage system component layout is shown below (HEV):

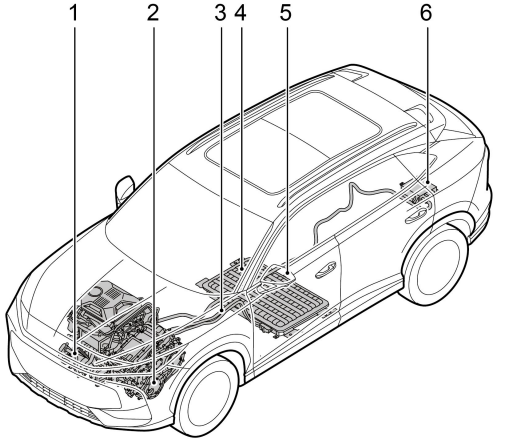

1 Electric A/C Compressor
2 Electric Drive Unit
3 High-voltage Harness
4 High-voltage Battery Pack
5 Manual Service Disconnect
6 DC-DC Converter

Crash Outage Control

If a serious collision occurs, a signal from the SDM will disconnect the relays within the High-voltage battery back to cut off the high-voltage output of the high-voltage battery pack.

Intelligent Charging

When the vehicle is powered OFF and the system detects that the 12V battery is running low, the vehicle will automatically charge the 12V battery under certain conditions to ensure the vehicle starts. This function will be automatically turned off upon completion of charging.

Note: The system will suspend intelligent charging if a fault is present, when starting or the vehicle is being charged by an external device.

Note: The driving range will be reduced after intelligent charging.

Note: The intelligent charging function is suspended when the high voltage battery is in a low SOC.

Note: The engine will not be started when this function is turned on.

Charging and Discharging Requirements*



A check will be conducted to confirm whether the state of inlet, jack and wire is good or not before charging.



The charging connector should be connected to the charging inlet in the body before operating the charging device.



During charging, starting operation is not allowed.



During the charging operation, people around are not allowed to contact the operator, the vehicle and the power supply device.



When the charging pile breaks down, immediately notify the relevant professional and the operator cannot handle it without authorisation.



When the charging pile breaks down, immediately notify the relevant professional and the operator cannot handle it without authorisation.



After charging, turn off the charging device first and unlock the vehicle, then disconnect the charging connector from the vehicle body and close the charging port door and the charging port cap on the body.



Charging can be conducted in rainy days, but rainproof measures will be adopted for charging connector and charging port in the process of removing and inserting charging connector. Charging operation need be stopped in extreme weather such as storm.



Never use a high-power water gun directly in the charging port area for cleaning.

Charging Your Vehicle at Home

Before installing a home charging kit, it is essential that you check with a qualified electrician that the infrastructure of your property will support the charging equipment. Please seek qualified advice that your current electrical supply and circuits will support the requirements of the charging equipment.

Charging Pile

Various companies will supply and install charging piles to your property and MG insists that only qualified reputable suppliers and installers can be used for installation service. Failure to have the correct equipment installed by a qualified professional may result in overloaded circuits, which could lead to a fire. .

Home Charging Guide

ONLY use certified equipment.

ONLY use qualified suppliers and installers.

When the high-voltage battery pack is fully charged, disconnect the charging connector from the vehicle charging port. If it is necessary to interrupt the charging of the vehicle, isolate the power supply first, then disconnect the charging connector.

NEVER allow water or fluids to enter your charging connector or vehicle charging port.

NEVER use damaged charging piles, equipment or sockets.

STOP charging immediately if you see anything unusual, smell something burning or see sparks.

ALWAYS follow the operating instructions supplied with your charging equipment.

Note: Charging stations and power infrastructure must be installed and maintained by qualified personnel from recognised installation companies, using materials recommended by them.

Medical Advice Relating To Charging Operation

High voltage charging equipment can create areas of strong electromagnetic interference,this may cause operational issues with electronic medical devices.

When using medical electrical devices such as pacemakers or cardioverter defibrillators (ICD) , please consult your doctor about whether charging or discharging your electric vehicle will have an impact on the operation of the device. In some instances, electromagnetic waves that are generated from the charging/discharging equipment can seriously impact medical electric device operation.

Note: There are no cautions issued about medical devices when the car is not connected to a charge point and charging. It is perfectly safe for individuals fittedwith pacemakers or cardioverter defibrillators to drive or ride in the vehicle.

Charging Port

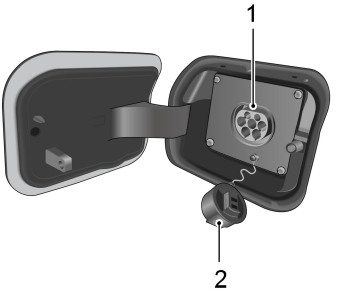

1 Slow Charging Port

2 Charging port cover

Charging port door

The charging port door is located at the rear left of the vehicle and connected to the central control lock system. Press the right side of the door to open it when the vehicle is unlocked.

Charging port cover

Gently loosen the retaining clip to open the charging port cover.

Charging port electronic lock

The charging port has the electronic lock function to prevent the charging connector from being accidentally pulled out during charging. After the charging connector is inserted into the charging port, the electronic lock will activate in conjunction with the main control switch. In this case, do not forcibly pull out the charging connector to avoid damage. It must be pulled out after the vehicle is unlocked.

Manually Releasing the Charging Port Lock in Emergency Situations

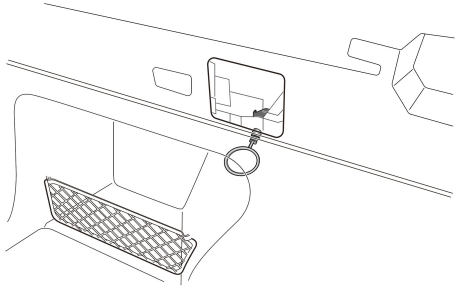

Open the access port on the left loadspace trim panel to expose the open cable for the charging port electronic lock. Under any circumstance, if the automatic unlocking function of charging port electronic lock fails, pull the release cable to unlock the charging port electronic lock.

Charging Identification Number*

Identifier Label on Slow Charging Kit

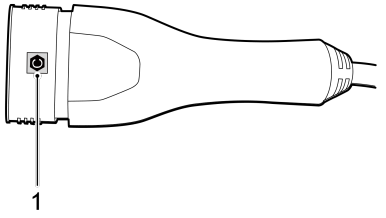

1 AC charging identifier label

Identifier Labels on Charging Port

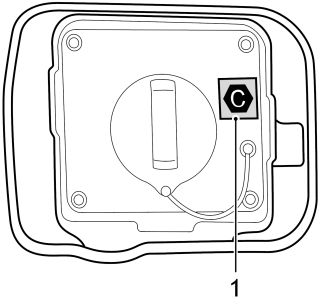

1 AC charging identifier label

Charging Precautions

After opening the charging port door, check the charging identifier label on the charging port cover. Check the charging connector identifier label on the charging pile. After checking that the alphabetic characters of the

charging identifier labels match, proceed to the next charging step.

Note: Risk of failure, fire or injury etc. when using a charging connector with unmatched identifier symbols.

Electric charging identifier label symbol table

Supply Type	Configuration	Type of Accessory	Voltage Range	Identifier
AC	5P (5 pins)	Charging port	≤480V	

Charging Operation

Use an AC charging pile

IMPORTANT
Please ensure that only charge points that meet IEC61851 and IEC 62196 are used to connect to your vehicle.

Using an AC charging device:

1 After the Start switch is turned off, close all doors.

2 Open the charging port door and the charging port cover.

3 Plug in the charging connector. Lock the vehicle.

4 On completion of the charge, unlock the vehicle and then disconnect the charging connector from the vehicle.

5 Make sure there is no debris or foreign matter in the charging port and then close the charging port cover and the charging port door in sequence.

Note: If at any time during the charging process you should want to check the state of charge, please switch the vehicle power system to the 'ON' position. the high voltage battery state of charge will be displayed in the message centre in the instrument pack.

Residential Charging

To use the charging function, follow the instructions below:

1 After the Start switch is turned off, close all doors.

2 Open the charging port door and the charging port cover.

3 Connect the handle of the slow charging connector to the slow charging port on the vehicle body.

4 Connect the slow charging connector to the civil electricity supply. Lock the vehicle.

5 On completion of the charge, shut off the power, unlock the vehicle, disconnect the connector from the vehicle and then the socket at the power supply side.

6 Make sure there is no debris or foreign matter in the charging port and then close the charging port cover and the charging port door in sequence.

Note: As required by IEC 62955 , the electrical leakage protective device MUST adopt the high-sensitivity high-speed electric leakage protector RCD Type B or RCD Type A (DC 6mA) and shall also be reliable in quality.

Note: If at any time during the charging process you should want to check the state of charge, please switch the vehicle power system to the ON position. the high voltage battery state of charge will be displayed in the message centre in the instrument pack.

Charging Information

At the beginning of the charging process, the charging information will be displayed on the instrument pack.

Equalisation Charging

Equalisation charging means that the battery management system realises the same voltage of all battery cells after charging, so as to ensure the whole performance of the high-voltage battery pack.

Charging Time

Charging time of high-voltage battery pack is related to many factors, such as current electric quantity, charging mode, ambient temperature and charging device power.

Table of charging time

Slow charging	Residential electricity	From alarm status to 100%, it takes almost 14.5 hours	From alarm status to 100% and equalisation, it takes almost 16.5 hours	It takes approx. 17 hours to complete equalisation charging before the first use of a long-time parked vehicle
	AC charging pile	From alarm status to 100%, it takes almost 4.2 hours	From alarm status to 100% and equalisation, it takes almost 6.2 hours	It takes approx. 6.5 hours to complete equalisation charging before the first use of a long-time parked vehicle

Note: These times are only a guide.

Note: Alarm state refers to the low battery warning lamp alarm of high-voltage battery pack on the instrument pack, while fully charged means that the battery of high-voltage battery pack displays 100% on the instrument pack.

- At low temperatures, the charging time will be extended;
- If an equalisation charge has not been conducted for a long time, the required charging time will be extended.
- An equalisation charge must be carried out prior to using the car after a long period of storage or non use. In these cases the charging time will be extended;
- In case of controller update, the charging time may be extended.

Discharging

The vehicle is equipped with a discharge function, this can covert the high voltage DC power in the high-voltage battery pack into domestic AC power.

This discharge function can be realised by using a discharge kit.

Note: Users have the opportunity to purchase the discharge kit from an MG Authorised Repairer.

To use the discharge function, follow the instructions below:

1 Unlock the vehicle and access the AC charging port (the charging port is also the discharging port).

2 Insert the discharge gun connector into the discharge port socket. When fully connected the discharge port indicator will illuminate blue.

3 Access the infotainment display screen, ensure the cut-off power limit of discharge is set. After setting, click the start discharging button, the electronic lock will lock the discharge gun in place and the vehicle will enter the discharge state. At this time, do not attempt to remove the discharge gun using force, this will damage the locking mechanism.

4 The user is able to click the stop discharging button in the infotainment display screen to stop the discharge, or stop the discharge after the power is discharged to the set cut-off value. At this time the electronic lock will automatically be released and the discharge gun can be removed.

5 Make sure there is no debris or foreign matter in the charging port, fit the charging port cover and close the charging point door.

Note: When the entertainment display screen shows that the current battery SOC is 0, discharge operation is not allowed. Please charge first and then discharge.

Note: After the vehicle starts discharging, if the infotainment display goes off, the vehicle will still maintain the discharging condition.

Note: The current power status and available driving range can be displayed on the instrument cluster.

Note: During the discharge process, the user can still set the discharge power cut-off point.

Note: During discharge, the vehicle cannot be placed in 'READY' mode.

Note: Using the discharge function will reduce the driving range of the vehicle.

IMPORTANT
• Before beginning the discharge operation, check the condition of the discharge connector and gun. • If it is necessary to use the discharge function on days with poor weather conditions, please pay particular attention in protecting the discharge port area and discharge gun from water, rain or snow. • In cases of abnormal phenomena such as peculiar smells, smoke emission or overheating etc during the discharge process, the electrical circuit MUST be disconnected immediately and the discharge operation stopped.

Battery Information Security

Batteries pose potential risks, and appropriate protective measures must be taken during operation and maintenance!

Only the correct tools and suitable protective equipment must be used when handling batteries!

Maintenance of batteries must only be performed by individuals with approved certification, specialised battery knowledge and the correct safety training!

Failure to adhere to any of the above warnings may result in severe accidents or even death!

High-voltage Battery Pack

The high-voltage battery pack contains several lithium-based battery cells and high-voltage wiring harness.

- High-Voltage Safety: Only qualified personnel are allowed to use high-voltage systems - Danger of Death. DO NOT attempt to disassemble any area of the high-voltage or battery system, and properly trained professionals must observe insulation safety safeguards before working on or near the high-voltage system. Arbitrary disposal may cause pollution, harm and destruction to the environment. Short circuit of the positive and negative poles of the battery is strictly forbidden, otherwise it will lead to strong current and high temperature, causing personal injury or even fire. Since the positive and negative terminals of the battery are exposed within the plastic protective sleeve, adequate safety measures must be taken during the assembly and connection of the battery system to prevent short circuits. Incorrect electrical connections may cause the battery to overheat during use.
- Transportation: High-voltage battery packs are classified as Cat.9 hazardous goods and must be transported by a vehicle qualified to transport Cat.9 hazardous goods.
- Storage: Batteries should be stored at room temperature and in a dry environment. They must be kept away from hazardous areas and objects such as flammable materials, heat sources, and water sources.

- Recycling: High-voltage battery packs must be recycled by an Authorised repair shop or a professionally approved dismantling agent.

12V Battery

DO NOT attempt to disassemble or modify without authorisation.

DO NOT short circuit or reverse the positive and negative terminals.

Keep away from children.

DO NOT use batteries that show signs of damage, leakage or expansion.

DO NOT tilt or invert the battery.

Portable batteries (button, cylindrical, built-in batteries, etc.)

Keep batteries away from children and seek medical care immediately if swallowed.

DO NOT short circuit or connect batteries with reverse polarity.

DO NOT forcibly discharge, squeeze, puncture or burn the battery.

DO NOT disassemble the battery. Faulty or discharged batteries shall be removed from the vehicle or appliance and disposed of in accordance with local laws or given to a professional recycling facility.

DO NOT mix different types of batteries.

DO NOT expose the battery to temperatures exceeding 155 °C. Always keep away from fire.

DO not attempt to solder directly to battery posts or terminals. Store and install the battery in its original packaging or location to avoid any possibility of external short circuits.

DO NOT store the battery in an electrostatic discharge (ESD) bag or foam.

DO NOT store batteries on metal surfaces and always make sure there is adequate insulation. When storing, do not stack batteries or mix battery types.

Brief Introduction to Vehicle Functions

2

Instrument Pack	*47*
Warning Lamps and Indicators	*55*
Lights and Switches	*70*
Wipers and Washers	*77*
Horn	*80*
Rearview Mirrors	*81*
*Sunroof **	*85*
Windows	*90*
Sunvisor	*93*
Interior Lighting	*94*
Power Socket	*97*
*Mobile Phone Wireless Charging**	*99*
Storage Devices	*101*

Cup Holder *104*

Instrument Pack

Instrument Information Display Operation

Message centre functions can be selected when the vehicle is powered on by using the buttons on the right hand side of the multifunction steering wheel as follows:

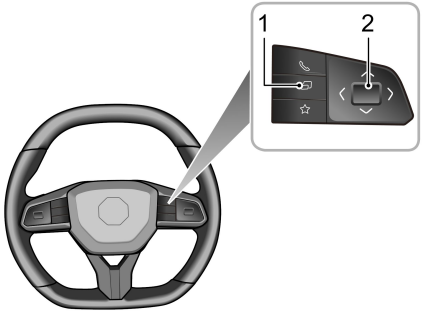

1 Card messages can be cycled using the button (1) on the steering wheel.

2 Function Adjustment Button (OK button)

- Push the button up, down, left and right to switch the items displayed in the message centre.
- Push the button up and down to make adjustments.
- Short press the button to confirm or long press to reset.

Note: The images in this chapter are for reference only. According to different vehicle configurations, software versions and market regions, the content displayed on the interface may vary. Please refer to the actual vehicle interface diagram for accuracy.

Instrument Pack - Type A (PHEV)*

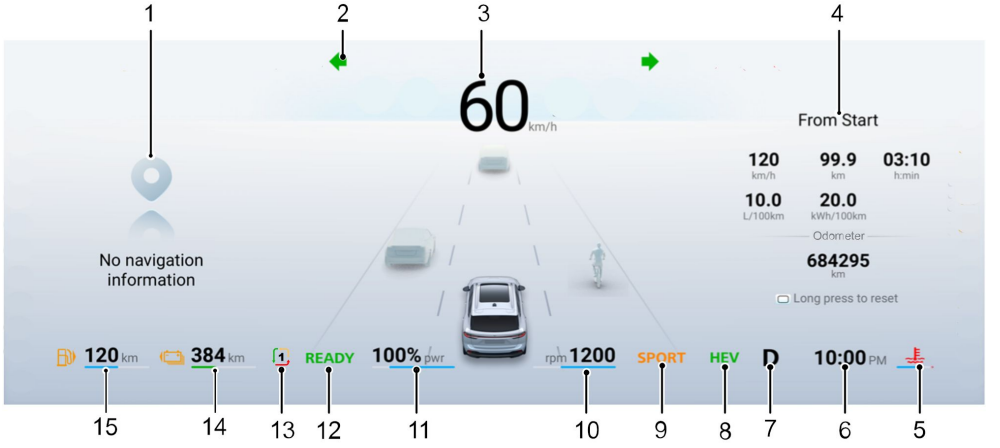

Note: The instrument pack has multiple display modes, these can be set via the entertainment display.

1 Left Card
Displays information such as navigation and active safety.

2 Warning Lamps and Indicators
Refer to 'Warning Lights and Indicators' in this chapter for details.

3 Vehicle Speed

4 Right Card
Displays fault information, health centre, current mileage, cumulative mileage, power centre, navigation, multimedia, Bluetooth phone, etc. The card display can be set via Vehicle Settings on the entertainment display.

5 Engine Coolant Temperature

6 Time

7 Gear Display

8 HEV mode

9 Driving mode*

10 Engine Speed

11 Power Meter

12 Power system status

13 Regeneration Level
Refer to the chapter 'Starting and Driving' for details.

14 Electric Power Driving Range

15 Fuel Gauge and Fuel Driving Range

Instrument Pack - Type B (Fuel)*

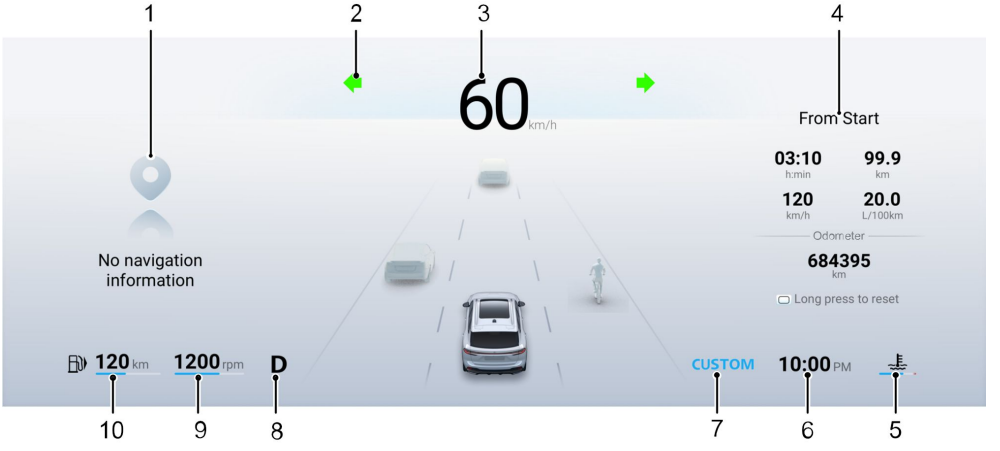

Note: The instrument pack has multiple display modes that can be set via the entertainment display.

1 Left Card
Displays information such as navigation and active safety.

2 Warning Lamps and Indicators
Refer to 'Warning Lights and Indicators' in this chapter for details.

3 Vehicle Speed

4 Right Card
Displays fault information, health centre, current mileage, cumulative mileage, navigation,multimedia, Bluetooth phone, etc. The card display can be set via Vehicle Settings on the entertainment display.

5 Engine Coolant Temperature

6 Time

7 Driving Mode*

8 Gear Display

9 Engine Speed

10 Fuel Gauge and Fuel Driving Range

Instrument Pack - Type C (HEV)*

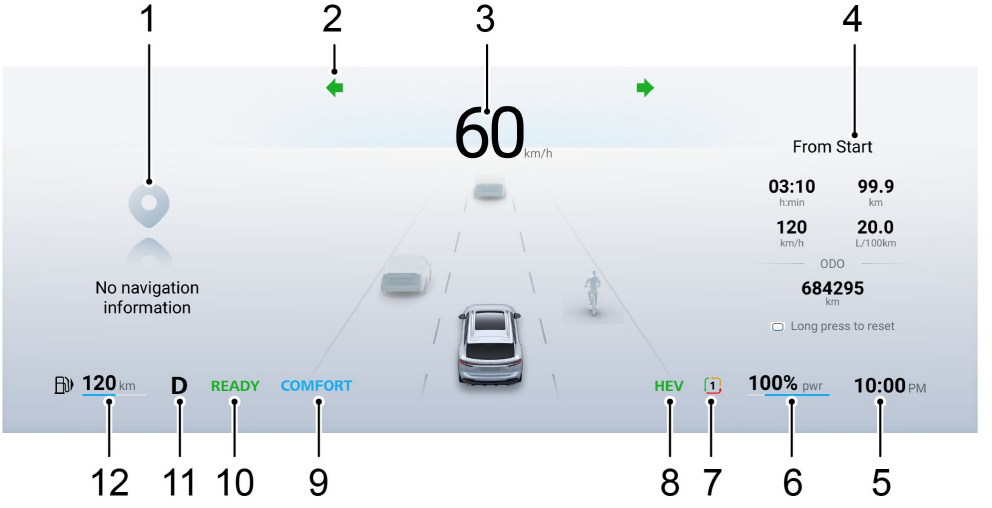

Note: The instrument pack has multiple display modes, these can be set via the entertainment display.

1 Left Card
Displays information such as navigation and active safety.

2 Warning Lamps and Indicators
Refer to 'Warning Lights and Indicators' in this chapter for details.

3 Vehicle Speed

4 Right Card
Displays fault information, health centre, current mileage, cumulative mileage, navigation, multimedia, etc. The card display can be set via Vehicle Settings on the entertainment display.

5 Time

6 Power system status

7 Regeneration Level

8 HEV mode

9 Driving mode*

10 Power system status

11 Gear Display

12 Fuel Gauge and Fuel Driving Range

Warning Message

The message centre in the instrument pack displays any warning messages via a pop-up box. The warning messages are mainly classified into:

- Operation Instructions
- System State Prompts
- System Malfunction Alert

Please follow the text prompts or refer to the relevant control system sections for the failure cause, actions and appropriate solutions.

Warning Lamps and Indicators

When the vehicle is starting or traveling, if warning lamps or indicators appear in the instrument display, it indicates that the relevant system is in a certain state or is faulty. Some warning lamps illuminate or flash with warning tones or prompt message.

Please carefully read the following instructions to understand the meaning of relevant warning lamps and indicators. In case of a failure, please take any necessary actions in an appropriate time and contact an MG Authorised Repairer for service as soon as possible.

Name	Icon	Note
Dipped Beam Indicator		The dipped beam headlamp has been switched on.
Main Beam Indicator		The main beam headlamp has been switched on.
Automatic Headlamp Indicator*		The auto headlamp function has been enabled.
Side Lamp Indicator		The side lamps are on.

Rear Fog Lamp Indicator		Rear fog lamps has been switched on.
Front Fog Lamp Indicator*		Front fog lamps has been switched on.
Direction Indicator Lamp		When the left or right turn signal lamp flashes, the direction indicator lamp on the corresponding side also flashes. If the hazard warning lamps are turned on, both direction indicator lamps will flash simultaneously. If either direction indicator lamp in the instrument pack flashes very rapidly, it indicates the turn signal lamp on the corresponding side has a failure.
Airbag Warning Lamp		If this lamp illuminates or fails to extinguish, it indicates a failure in the SRS or seat belt. Stop the car as soon as safety permits and power off the vehicle. There may be a risk that the SRS system or seat belt(s) may not be able to work properly if an accident occurs.
Seat Belt Unfastened Warning Lamp		If this lamp illuminates or flashes, it indicates that the seat belt for an occupied seat remains unfastened.

Anti-theft System Warning Lamp		If this lamp illuminates, it indicates that no valid key is detected, in which case please use the correct key, or put the smart key in the alternative starting position. For details, refer to 'Alternative Starting Procedure' in 'Starting and Driving' chapter.
Tyre Pressure Monitoring System (TPMS) Warning Lamp		If this lamp illuminates, it indicates that the tyre pressure is low. Please check the tyre pressures. If this lamp flashes and then remains ON after a period of time, it indicates the system has detected a fault.
Electric Power Steering System (EPS) Warning Lamp		If this lamp is illuminated a fault has been detected within the electric power steering system and the performance of the system will be reduced. Please contact an MG Authorised repairer immediately.
		If this lamp is illuminated a fault has been detected within the electric power steering system and the performance of the system will be reduced. Please contact an MG Authorised repairer immediately. If this lamp flashes, it indicates that the electric power steering system has a serious fault, making it hard to steer. Please stop the vehicle as soon as safety permits and contact an MG Authorised Repairer immediately.

Dynamic Stability Control/Traction Control System Warning Lamp		If this lamp illuminates, it indicates that the dynamic stability control system/traction control system has detected a fault and is inoperative. If this lamp flashes while driving, it indicates that the system is operating to assist the driver.
Dynamic Stability Control/Traction Control System OFF Warning Lamp		The dynamic stability control/traction control system is turned off.
Hill Descent Control (HDC) ON/Malfunction Indicator Lamp		If this lamp illuminates, it indicates that the HDC system has entered the Standby mode. If this lamp flashes, it indicates that the system is currently under the control of HDC.
		HDC relevant system detected a fault and is inoperative.
AUTO HOLD System Status Indicator Lamp		The AUTO HOLD system is operating to assist the driver.

Electronic Parking Brake (EPB) System Status Indicator Lamp		If this lamp illuminates, it indicates that the EPB is enabled. If this lamp flashes, it indicates that the vehicle is parked on a slope with excessive angle or the electronic parking brake system failed, in which case please park the vehicle on a suitable safe road.
Electronic Parking Brake (EPB) System Malfunction Indicator Lamp		It indicates that the EPB system has detected a fault and is inoperative.
Brake System Malfunction Indicator Lamp		If this lamp illuminates it indicates that the brake system has a failure, please stop the car as soon as safety permits and switch the vehicle off.
ABS Malfunction Indicator Lamp		The ABS has detected a fault and is inoperative. If an ABS failure occurs while driving, the ABS function will be disabled while normal braking will still be available.
Low-voltage Battery Charging System Malfunction Warning Lamp		If this lamp illuminates after starting the car, it indicates that the low-voltage battery charging system has detected a fault. If this lamp flashes, it indicates that the low-voltage battery is low, please start the vehicle immediately to charge the low-voltage battery.

Engine Coolant Temperature Warning Lamp		When the engine coolant temperature warning lamp illuminates red, it indicates that the coolant temperature is high. High engine coolant temperature could result in severe damage. Please stop the car as soon as safety permits, switch the engine OFF and contact an MG Authorised Repairer immediately. If this lamp flashes, it indicates that the engine coolant sensor failed, in which case stop the car as soon as safety permits and turn off the start switch.
Engine Malfunction Indicator Lamp		The vehicle has a failure that seriously affects the performance of the engine. Stop the car as soon as safety permits and turn off the Start switch.
Engine Emission Malfunction Indicator Lamp		If this lamp illuminates after the vehicle is started, it indicates an engine emissions malfunction and continued driving may result in damage to the catalytic converter. It is recommended to stop the vehicle and turn off the Start switch as soon as it is safe to do so. If this lamp flashes after the vehicle is started, it indicates a severe engine misfire malfunction. Please stop the vehicle and turn off the Start switch as soon as it is safe to do so.

Gasoline Particulate Filter Warning Lamp		If this lamp illuminates, it indicates that the gasoline particulate filter is clogged and should be regenerated. Please contact a local MG Authorised Repairer as soon as possible. If this lamp flashes, it indicates that the gasoline particulate filter is severely clogged and should be regenerated. Please contact a local MG Authorised Repairer immediately.
Low Oil Pressure Warning Lamp		If this lamp illuminates after the vehicle is started, it indicates that the oil pressure is too low, which may result in severe engine damage. Stop the car as soon as safety permits and turn off the Start switch.
System Failure Information Indicator*		The vehicle has some warning messages; please refer to 'Message Centre' for failure information or important notes. Refer to 'Instrument Pack' in this chapter.

Low Fuel Warning Lamp		The warning lamp illuminates when the fuel remaining in the fuel tank is low. If possible, please refuel before the low fuel warning lamp illuminates. When the fuel level continues to fall, this lamp flashes and continuing to drive may cause the vehicle to stall due to fuel exhaustion. Please add fuel as soon as possible. When fuel is added to the tank and the fuel level rises above the alert limit, if this lamp still illuminates, seek a local MG Authorised Repairer as soon as possible.
Drive Power Restricted Indicator*		The drive power is restricted.

Power Battery Malfunction Indicator Lamp*		If this lamp illuminates, it indicates a severe failure with the power battery system. Please stop the vehicle as soon as safety permits, turn off the Start switch and seek a local MG Authorised Repairer for repair immediately. If this lamp flashes, it indicates a thermal runaway failure with the power battery. Please stop the vehicle as soon as safety permits, turn off the Start switch, leave the vehicle immediately and seek a local MG Authorised Repairer for repair.
		If this lamp illuminates, it indicates a general failure with the power battery system. Please seek a local MG Authorised Repairer as soon as possible.
Drive Motor Malfunction Indicator Lamp*		If this lamp illuminates, it indicates that the motor system fails. Please stop the vehicle as soon as safety permits and seek a local MG Authorised Repairer.
		If this lamp illuminates, it indicates a general failure with the motor system.
READY Indicator*		The vehicle is ready to operate.

Power Battery Pack Low Battery Warning Lamp*		If this lamp illuminates, it indicates that the power battery pack is low, please charge it as soon as possible. If this lamp flashes, it indicates that the power battery pack is extremely low, please charge it immediately.
Power System Malfunction Indicator Lamp*		A general fault has occurs in the power system and its functions are limited.
		The power system has a severe fault, please stop the car as soon as safety permits and power off the vehicle.
Charging/Discharging Status Indicator*		It indicates charging/discharging failure.
		The vehicle is in charging/discharging state.
		
Charging Connection Indicator Lamp*		The charging/discharging gun is connected.

Drive Status Indicator Lamp*		The vehicle is currently in EV mode.
		The vehicle is currently in HEV mode.
Constant Speed Cruise Control System Indicator Lamp*		The constant speed cruise control system is in Standby state. ***Note: The lamp is displayed in dark color in daylight mode.***
		The constant speed cruise control system is activated.
Adaptive Cruise Control System Indicator*		The adaptive cruise control system is activated and not in Standby state.
		The adaptive cruise control system is in Standby state. ***Note: The lamp is displayed in dark color in daylight mode.***
		The adaptive cruise control system is activated.

Speed Limit Assistance System Indicator*		Manual speed limit assistance system is in Standby state. ***Note: The lamp is displayed in dark color in daylight mode.***
		If this lamp illuminates, it indicates that the manual speed limit assistance system is activated. If this lamp flashes, it indicates that current speed is greater than the speed limit value.
		The intelligent speed limit assistance system is in Standby state. ***Note: The lamp is displayed in dark color in daylight mode.***
		The intelligent speed limit assistance system is activated.
Cruise/Speed Limit System Malfunction Indicator Lamp		The constant speed cruise control system, adaptive cruise control system or speed limit assistance system has a failure.
Speed Limit Sign Speed Indicator*		' NNN ' indicates the speed value on the speed limit sign currently identified. When the vehicle speed is greater than the speed limit value, the lamp will flash. ' — ' Unrecognized speed limit information.

Speed Limit Sign Ancillary Information Warning Lamp*		The speed limit sign currently identified has ancillary information. Please check.
		The overspeed alarm and intelligent speed limit assist system are turned off simultaneously.
		Overspeed alarm fault.
		The road sign speed limit is recognised and the audible alarm only is turned off currently. After a period of time, the audible alarm off icon in the lower left corner disappears.
eCall-SOS Emergency Assistance Indicator Lamp*		The system is ready for eCall-SOS emergency assistance service.
		The eCall-SOS emergency assistance system can send the vehicle information to the Call Center, but other functions are limited due to a fault in the system.
		The eCall-SOS emergency assistance system failed and cannot work.

Driver Status Indicator		If this lamp illuminates, it indicates that the driver detection system has failed or is not available. If this lamp flashes, it indicates that the driver fatigue or distraction is detected.
Trailer Malfunction Indicator Lamp		The trailer has a fault.
Rearward Driver Assistance Indicator*		When the rearward driver assistance system is disabled, the radar is obscured or the system has a failure, the corresponding prompt message will be displayed on the instrument pack.
Intelligent Cruise Assist System Indicator*		The intelligent cruise assist system is on and not in Standby state.
		The intelligent cruise assist system is in Standby state. ***Note: The lamp is displayed in dark color in daylight mode.***
		The intelligent cruise assist system is activated.
		The intelligent cruise assist system malfunctions.

Start/Stop System Malfunction Indicator Lamp*		If this lamp remains on, it indicates that the start/stop function has failed.
Start/Stop System Status Indicator Lamp*		If this lamp remains on, it indicates that the start/stop system is activated. If this lamp flashes, it indicates that the start/stop system does not meet the shutdown conditions.
Lane Keeping Assist System Indicator		The lane keeping assist system is working.
		The lane keeping assist system has failed.
Forward Collision Assist System Indicator Lamp*		If this lamp illuminates, it indicates any function of the forward collision assist system is disabled. When the functions of the forward collision assist system are fully enabled, if the lamp stays on, it indicates that forward collision assist system cannot work properly.

Lights and Switches

Master Light Switch

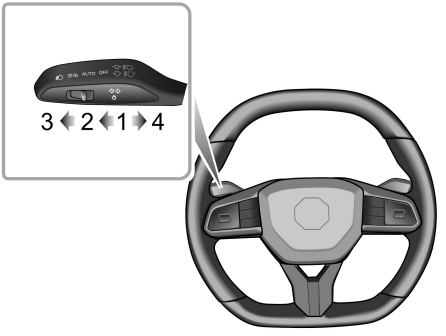

AUTO	AUTO Lamp
	Side Lamp and Switch Backlights
	Headlamp
OFF	AUTO Lamp Off

AUTO Lamp

With the Start switch in ACC position, the AUTO lighting system is active by default (position 1). The system will automatically switch on or off the side lamps and switch backlights according to the intensity of current ambient light.

With the Start switch in ON/RUNNING/READY position, the AUTO lighting system will automatically switch on or off the low beams, side lamps and switch backlights according to the intensity of current ambient light.

Side Lamp/Switch Backlights

When the Start switch is in the ACC position, toggle the master light cycle switch to position 2 to switch on the side lamps/switch backlights.

When the Start switch is in the ON/RUNNING/READY position, toggle the master light cycle switch to position 2 to switch on the daytime running lamps, side lamps and switch backlights.

For some models, when the environment is dark and the gear is not in P, the low beam will automatically light up.

With the Start switch in the OFF position, if the side lamps stay on when the driver's door is open, the system will issue an alarm.

Headlamp

When the Start switch is in the ON/RUNNING/READY position, toggle the master light cycle switch to position 3 to switch on the low beams, side lamps/switch backlights.

AUTO Lamp Off

Toggle the master light switch to position 4 to turn off the AUTO lamp. When released, the switch automatically returns to position 1.

For some models, when the environment is dark and the gear is not in P, the low beam will automatically light up.

Daytime Running Lamp

The daytime running lamps turn on automatically when the Start switch is in the ON/RUNNING/READY position. When the low beam is turned on, the daytime running lamp goes out automatically.

Welcome Light*

When the vehicle is unlocked, the system will automatically turn on corresponding external lamps according to the intensity of the current ambient light to show the welcome effect. The welcome light function can be set in the Vehicle Settings interface on the entertainment display.

Follow Me Home

When the power system is turned off, the light lever switch is in the AUTO position and the AUTO lamp is turned on, The Follow Me Home function will be enabled and the low beams and side lamps will illuminate for a period of time and then automatically turn off. Follow Me Home function can be set in the Vehicle Settings interface on the entertainment display.

Headlamp Levelling

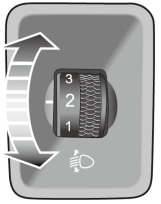

The headlamp levelling can be adjusted as per the following table according to the vehicle load.

Location	Load
0	Driver or driver & front passenger
1	All the seats occupied with no load in the loadspace.
2	All the seats occupied plus an evenly distributed load in the loadspace
3	Driver only, plus an evenly distributed load in the loadspace

Switching between High Beam and Low Beam Headlamps

Take care not to dazzle oncoming vehicles when switching between the main and dipped beams.

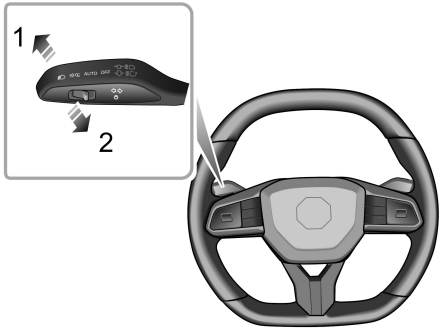

When the Start switch is in the ON/RUNNING/READY position and the low beams illuminate, push the light lever switch (1) towards the instrument panel to turn on the high beams and the high beam indicator on the instrument illuminates. Push or pull the lever (1 or 2) once again to switch to low beams.

High Beam Flash

To briefly flash the high beam, pull the lever towards the steering wheel and release it several times.

Smart High Beam System

The Automatic High Beam serves only as an auxiliary function. The driver must check the status of the front lamps and turn on the front lamps when necessary.

The Automatic High Beam may not operate normally in the following cases, operation is not limited to the following and so the main and dipped beams should be switched manually:

- ***The windscreen is dirty, broken or obstructed by other objects blocking the view of the sensor.***
- ***The headlamps of other vehicles are obstructed or blocked and cannot be detected.***
- ***When pedestrians, non-motor vehicles and other objects with no obvious light or reflected light are encountered.***
- ***When the headlamps and tail lamps of other vehicles cannot be detected due to the sensor view being impaired due to undulating road conditions such as bends, dips or hills.***
- ***When the car is driving on a winding road or mountainous road.***
- ***The wiper switch is in the 'Fast Wipe' position.***

The smart high beam system can detect the light intensity of the vehicle ahead by the front view camera and the high beams can be turned on or off once certain conditions are met. When the smart high beam system is enabled, the smart high beam indicator on the instrument panel will illuminate.

With the automatic control, when it is dark and there is no vehicle ahead, the system will turn on the high beams; when it is quite bright in the front surroundings or the system detects the headlamps or tail lamps ahead, the system will turn off the high beams.

To enable the smart high beam system, the following conditions should be met:

1 The light lever switch is placed in position 'AUTO' and the low beams will automatically turn on.

2 The vehicle is running with the speed exceeding 25mph (40km/h).

3 The front fog lamps* are not illuminated.

The smart high beam system automatically exits when the following conditions are met: After the system has been exited for 2 seconds, quick pushing the high beam ON

switch twice towards the instrument panel will enter the smart high beam system again. Within 2 seconds after the system exits, quick pushing the high beam ON switch once towards the instrument panel will enter the smart high beam system again. The smart high beam system automatically exits when the following conditions are met. When the smart high beam system is enabled and low beams automatically turn on, manually switch to high beams. It can only be exited for not more than three times in a start cycle otherwise this feature cannot be enabled again in the current start cycle:

- When the smart high beam system is enabled and high beams automatically turn on, manually switch to low beams.
- When the smart high beam system is enabled and high beams automatically turn on, toggle the high beam flashing switch.

IMPORTANT
The Automatic High Beam function uses data from the front view camera, always keep the windscreen clean and free from residue in this area to maintain optimum performance of this system. Any damage in this area such as stone chips must be repaired at the earliest convenience.

Turn Signal Lamp

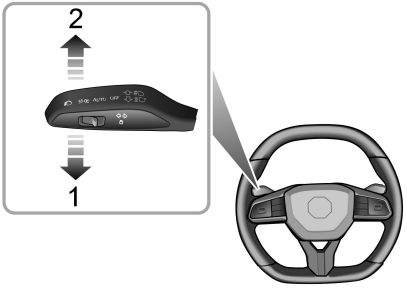

With the Start switch in the ON/RUNNING/READY position, push the light lever switch upward or downward to turn on the turn signal lamp. The corresponding GREEN indicator lamp in the instrument pack will flash when the turn signal lamps are working.

After resetting the steering wheel, the lever will be automatically reset to the centre and the turn signal lamps go off. If the steering wheel angle is small, manually reset the lever to turn off the turn signal lamps.

If the light lever switch is moved at a small angle, it will reset immediately. The turn signal lamps and direction indicator lamps will flash three times and then go out automatically.

Rear Fog Lamps



In severe conditions (during foggy weather for instance), weather lights can provide additional lights and improve the visibility range. Using them in clear conditions may dazzle pedestrians or other road users.

With the Start switch in the ON/RUNNING/READY position and the low beams on, open rear fog lamp switch to turn on the rear fog lamps. With rear fog lamps on, the indicator on the instrument panel will illuminate. The rear fog lamp function can be set in the Vehicle Settings interface on the entertainment display.

Front Fog Lamps*

With the Start switch in the ON/RUNNING/READY position and the side lamps on, turn on the front fog lamp switch to turn on the front fog lamps. The indicator illuminates on the instrument panel when the front fog lamps are on. The front fog lamp function can be set in the Vehicle Settings interface on the entertainment display.

Hazard Warning Lamp

Press the hazard warning lamp switch in the centre of the A/C control panel to ⚠ turn on the hazard warning lamps. All turn signal lamps and direction indicator lamps will flash together. Press the button again to switch off the hazard warning lamp. All turn signal lamps and direction indicator lamps will stop flashing.

Wipers and Washers

Front Windscreen Wiper and Washer Operation

When the Start switch is in the ACC /ON /RUNNING / READY position, operate the lever switch to select different wiping modes.

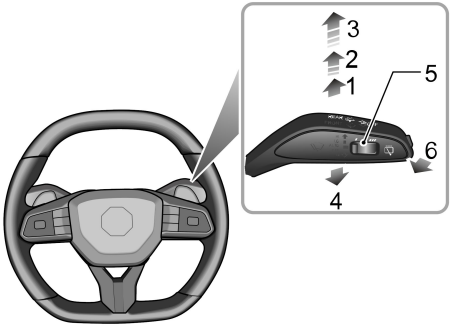

- AUTO: Automatic wipe (1)
- LO: Slow speed wipe (2)
- HI: Fast speed wipe (3)
- 1x: Single wipe (4)
- Rain sensor sensitivity adjustment (5)
- Wash and wipe (6)

AUTO: Automatic wipe

By pushing the lever up to the automatic wipe position (Position 1), the wipers will operate automatically.

Turn the switch (5) to adjust the sensitivity of the rain sensor. As the sensitivity increases, the wiping interval decreases. The rain sensor is equipped in the interior rearview mirror base to detect varying amounts of water outside of the windscreen. With automatic wipe, the vehicle will adjust the wiping speed according to the signals provided by rain sensor.

Note: When increasing the sensitivity of rain sensor, the wiper will operate once immediately; if the rain sensor detects continuous rainwater, the wiper will keep working. When no rain is detected, it is recommended to switch off automatic wipe.

LO: Slow speed wipe

The wipers will operate slowly by pushing the lever up to the slow speed wipe position (2).

HI: Fast speed wipe

The wipers will operate at fast speed by pushing the lever up to the fast speed wipe position (3).

1x: Single wipe

Pressing the lever down to the single wipe position (4) and releasing will operate a single wipe. If the lever is held in the single wipe position (4), the wiper will operate continuously until the lever is released.

Note: When the car is stationary, if the bonnet is opened, the front wiper/washer operation will be disabled.

IMPORTANT
• Avoid operating the wipers on a dry windscreen. • In freezing or extremely hot conditions, make sure that the wiper blades are not frozen or adhered to the windscreen. • In winter, remove snow or ice from around the wiper arms and blades, including the wiped area of the screen.

Wash and wipe

Pulling the lever toward the steering wheel will operate the front windscreen washers. After a short delay, the wipers will commence operating in conjunction with the washers.

Note: The wipers continue operating for three wipes after the lever switch is released. After several seconds, there will be a further wipe to remove any washer fluid from the windscreen.

IMPORTANT
If the washers fail to deliver the screen wash solution (dirt or ice may have blocked the jets), release the lever immediately. This will prevent the wipers from operating and the consequent risk of visibility being impaired by dirt smearing across the unwashed windscreen.

Rear Window Wiper and Washer Operation

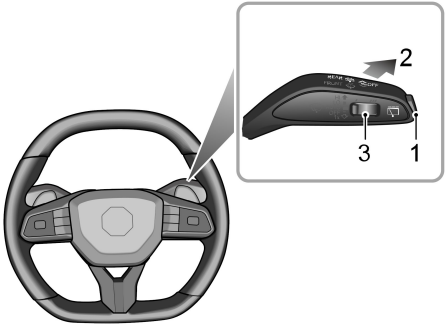

The rear wiper and washer will operate only when the Start switch is in the ACC/ON/RUNNING/READY position.

Intermittent Wipe

Press and release the intermittent wipe button (1), so that the wiper will wipe three times immediately and then wipe intermittently. Press the intermittent wipe button again to turn off the intermittent wipe. Toggle the automatic wiper speed adjustment switch (3) to adjust the intermittent wipe interval.

Wash and wipe

Pushing the lever toward the instrument panel will operate the rear window washers.

The wipers continue operating for a further three wipes after the lever is released. After several seconds, there will be a further wipe to remove any fluid draining down the screen.

Note: When the tail gate is opened, rear wiper operations will be disabled.

Note: If the windscreen wipers are switched on and Reverse (R) gear is selected, the rear wiper will operate.

Horn



Press the horn button area on the steering wheel (as indicated by the arrow) to operate the horn.

Note: The vehicle horn button areas and the driver's airbag are located in close proximity on the steering wheel. The illustration shows the position of the horn (indicated by the arrows). Please ensure that you press in this area to avoid any potential conflict with the operation of the airbag.

IMPORTANT
To avoid possible SRS issues, please do not press with excessive force or hit the airbag cover when operating the horn.

Rearview Mirrors

The rearview mirrors consist of exterior rearview mirrors in the front of the vehicle on the left and right sides and interior rearview mirrors in the front of passenger compartment. They are used to reflect the situations behind or on both sides of the vehicle, thus expanding the driver's field of view.

The rearview mirrors are safety-critical parts. Proper use and reasonable mirror angle adjustment can improve the driver's driving safety and comfort.

Exterior Rearview Mirrors

The exterior rearview mirrors, as the widest parts mounted on the vehicle, are most vulnerable. To avoid scratches to the utmost extent, the exterior rearview mirrors of this series are all provided with folding function (manual folding or electric folding). This also greatly improves the trafficability of the vehicle through narrow passages.

In addition to the folding function, the mirror angle of the exterior rearview mirrors can be electrically adjusted and the mirrors can be heated. Some vehicles are also equipped with a mirror angle memory function.

Note: The following vehicles or objects are closer to you than they are seen from the mirror.

Manual Folding*

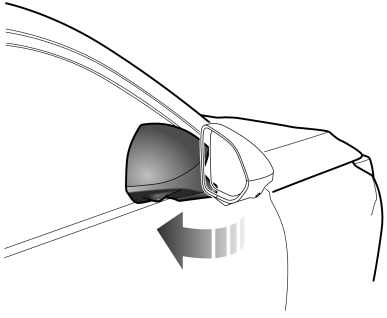

The exterior rearview mirrors can be folded backwards manually as illustrated.

Electric Folding*

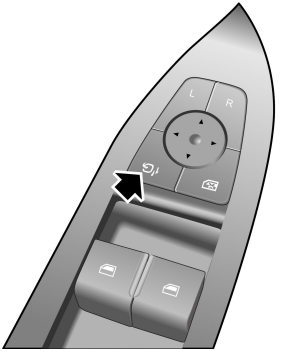

Press the button (arrowed) on the combination switch on the driver side, the exterior rearview mirror will be electrically folded. Pushing the button again will return the mirrors to their original position.

While unlocking/locking the vehicle, the exterior rearview mirrors will be unfolded/folded automatically. This function can be set in the relevant interface in 'Vehicle Settings' on the entertainment display.

Note: For vehicles equipped with electrical folding door mirrors, if the mirrors have been moved from their positions by manual or accidental means, they can be reset by operating the knob to complete fold and deployment one time.

Electric Adjustment of Exterior Rearview Mirrors

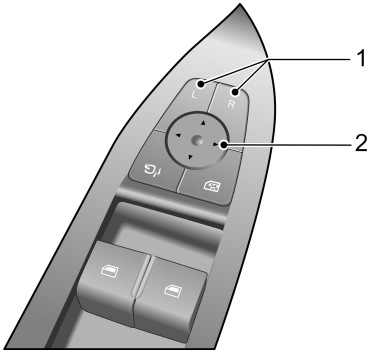

- Press the left (L) or right (R) switch (1) to select the left or right exterior rearview mirror. At the same time, the backlight of the selected switch illuminates.
- Gently press 4 arrows of the circular switch (2) to adjust the angle of the exterior rearview mirror.
- Press the L or R switch (1) again, the backlight of the corresponding switch extinguishes and the mirror adjustment operation can be stopped to avoid accidental adjustment of mirror angle which has been adjusted.

Note: The mirror angle memory function is equipped in some models and can be set with the seat position memory function, which not only reflects the driver's personalisation settings, but also improves the driving convenience.

Mirror Glass Heating

The exterior rearview mirrors have integral heating elements which can disperse frost or mist from the glass.

The heating elements operate while the Heated Rear Window is switched on, that is, only when the engine is started and the heated rear window is turned on, the heating function of the exterior rearview mirrors will work.

IMPORTANT

- The electric folding of the exterior rearview mirrors and the adjustment of mirrors are operated by the electric switch. Operating them directly by hand may damage related devices.
- Direct injection of high pressure water during car washing may also cause failure of the electric device.

Interior Rearview Mirrors

Adjust the body of the interior rearview mirror to achieve the best possible view. The anti-dazzle function of the interior rearview mirror can reduce glare caused by headlamps of vehicles behind at night.

Manual Anti-dazzle Interior Rearview Mirror



Move the lever at the base of the interior rearview mirror to change its angle, so as to achieve the anti-dazzle function. Normal visibility is restored by pulling the lever back again.

Note: In some circumstances, the view reflected in a 'dipped' manual mirror can confuse the driver as to the precise location of following vehicles.

Sunroof *

The sunroof assembly consists of two pieces of glass of which the front glass can be opened by sliding or tilting, the rear one is fixed-type and cannot be opened. The sunroof also consists of a sunshade which can be opened by sliding.

Instructions for Use



DO NOT allow passengers to lean out of an open sunroof whilst the vehicle is in motion. Injuries may occur from objects such as tree branches.



Safety of the vehicle occupants must be observed at all times. DO NOT allow limbs to be placed in the moving path of the sunroof at any time, injury may occur.



Please operate the sunroof correctly to avoid danger. The driver shall instruct the occupants on the use of the sunroof and safety precautions.



If there are children in the vehicle, ALWAYS turn off the START/STOP Switch when temporarily leaving the vehicle - to prevent children from accidentally operating the sunroof and causing danger.

- Do not open the sunroof in poor weather conditions;
- Try to avoid opening the sunroof at high speed;
- Open the sunroof only after the water on the sunroof glass has been cleared, otherwise water may fall into the interior of the vehicle;
- Clean the glass with cleaning solvents such as alcohol;
- Upon completion of the sunroof operation, release the switch in time. Otherwise it may result in a fault;
- To ensure the sunroof functions normally, please clean it frequently and go to a Local Authorised Repairer for service as required.

Sunroof Operation

When the Start switch is in the yellow light state and green light state, the sunroof can be operated.

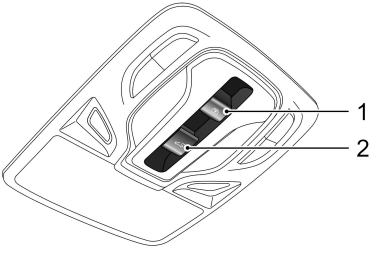

The sunroof switch is located on the ceiling above the front windscreen. The opening methods of sunroof can be identified according to the switch symbols. Switch 1 will be used to operate the sunroof sunshade and switch 2 will be used to operate the sunroof glass.

Sunroof Glass Operation

Tilt Open

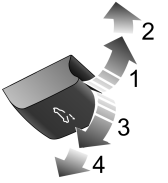

Push up the sunroof glass switch to the 1st position (1) and hold, the sunroof will be opened manually in a tilt manner. Sunroof movement can be stopped at any time by releasing the switch.

Push up the glass switch to the 2nd position (2) and then release, the sunroof will be fully opened automatically.

Tilt Close

Pull down the sunroof glass switch to the 1st position (3) and hold, the sunroof will be manually closed. Sunroof

movement can be stopped at any time by releasing the switch.

Pull down the glass switch to the 2nd position (4) and then release, the sunroof will be fully closed automatically.

Slide Open

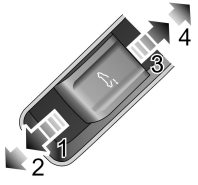

Push the sunroof glass switch backward to the 1st position (3) and hold, the sunroof will be manually opened by sliding. Sunroof movement can be stopped at any time by releasing the switch.

Push the glass switch backward to the 2nd position (4) and then release, the sunroof will be opened to the end automatically. Sunroof movement can be stopped at any time by pushing the switch backwards again.

Slide Close

Push the sunroof glass switch forward to the 1st position (1) and hold, the sunroof will be manually closed. Sunroof movement can be stopped at any time by releasing the switch.

Push the glass switch forward with excessive force to the 2nd position (2) and then release, the sunroof will be closed to the end automatically. Sunroof movement can be stopped at any time by pushing the switch frontwards again.

Note: Because the sunroof glass motor is steplessly regulated, in order to prevent the glass from not being closed completely due to the error of visual perception, it is recommended to use the second gear for automatic closing when the sunroof glass needs to be closed completely.

Sunroof Sunshade Operation

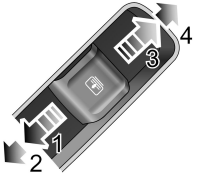

Open

Push the sunshade switch backward to the 1st position (3) and hold, the sunshade will be manually opened by sliding. You can stop the movement of the sunshade at any time by releasing the switch.

Push the sunshade switch backward to the 2nd position (4) and then release, the sunshade will be opened to the end automatically. You can stop the movement of the sunshade at any time by pushing the switch backward again.

Close

Push the sunshade switch forward to the 1st position (1) and hold, the sunshade will be manually closed. You can stop the movement of the sunshade at any time by releasing the switch.

Push the sunshade switch forward to the 2nd position (2) and then release, the sunshade will be fully closed automatically. You can stop the movement of the sunshade at any time by pushing the switch forward again.

Note: If you park the vehicle for a long period of time, it is recommended to close the sunshade; if possible, park the vehicle into garage to prevent the in-car temperature from rising due to long-time exposure, without damaging the interior.

'Anti-pinch' Function

During the close operation, the sunroof glass and sunshade will stop closing and open automatically when the closing resistance is increasing due to an obstacle, extreme weather (i.e, temperature below - 20 °C) or other causes, so as to reduce the impact on the obstacle and protect the sunroof movement mechanism.

Force Closing of the Sunroof Glass

To forcibly close the sunroof glass n a situation for example, were the sunroof has reopened due to the activation of the

anti-pinch function; slide the glass switch forward to the 1st position within 5 seconds and hold it until the sunroof glass is fully closed. Please note that the anti-pinch function is not available when closing the sunroof glass.

Force Closing of the Sunshade

To forcibly close the sunshade in a situation for example, where the sunshade has reopened due to the activation of the anti-pinch function; slide the sunshade switch forward to the 1st position within 5 seconds and hold it until the sunshade is fully closed. Please note that the anti-pinch function is not available when closing the sunshade.

Linkage between Sunshade and Sunroof Glass

To prevent the sunshade from being exposed, the sunshade will move together when the sunroof glass is opened. To close the sunshade, please close the sunroof glass first.

Sunroof Initialisation

peration of the sunroof will be affected in the event of a power failure when the sunroof glass or the sunshade is in motion. It will therefore be necessary to initialise the sunroof and/or the sunshade after powering on the vehicle.

Glass initialisation: fully close the glass, push the sunroof glass switch forward to the 2nd position (2) and hold for about 10 seconds, the glass will automatically slide open for a distance during which the switch shall be continuously operated to the 2nd position (2) until the sunroof has been fully closed.

Sunshade initialisation: fully close the sunshade, push the sunshade switch forward to the 2nd position and hold for about 10 seconds, the sunshade will automatically slide open for a distance and then close, during the entire process, the switch must be held in the 2nd position.

Thermal Protection

To prevent the sunroof glass motor and sunshade motor from damage due to overheating, they are provided with a thermal protection function.

When the heat protection is enabled, the sunroof can only be closed and does not respond to other operations. After the motor has cooled down and has exited the thermal protection state, the sunroof can be operated as normal. Unless the thermal protection function operates again.

Windows

Please correctly operate the windows to avoid injury. The driver should ensure passengers operate the windows in a safe manner.

Ensure children are kept clear when raising or lowering a window.

DO NOT operate the power window controls continuously in a short time frame, otherwise the power window controls may be disabled to protect the motor. If this occurs, please wait a few seconds until the motor cools down. Do not disconnect the negative battery during this time.

Power Operated Window Switch

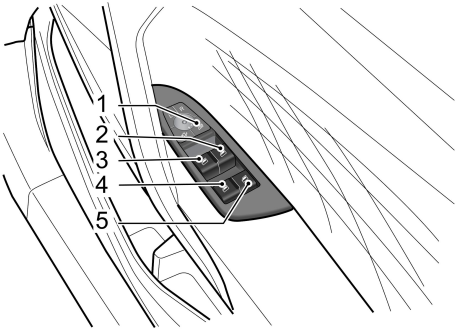

1 Rear Window Disabled Switch

2 Front Right Window Switch

3 Front Left Window Switch

4 Rear Left Window Switch

5 Rear Right Window Switch

Window Operation

When the Start switch is in position ACC/ON/RUNNING/READY, the power window can be operated (doors should be closed).

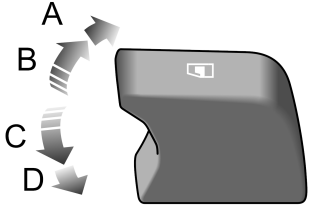

Press the window control switch (2 ~ 5) down to the 1st Position (C) to lower the window. Pull the switch up to the 1st position (B) will raise the window. The window will stop moving as soon as the switch is released.

'One-touch' Down

Press the window control switch (2 ~ 5) down to the 2nd Position (D) and release, the window will automatically descend and open completely. . Window movement can be stopped at any time by operating the corresponding switch again during descent.

'One-touch' Up and 'Anti-pinch'*

Depending on vehicle specification, some windows may have the 'One-Touch' up function. Lifting the switch to the 2nd position (A) and releasing will automatically close the window completely. Window movement can be stopped at any time by briefly operating the switch again during ascent.

The 'Anti-pinch' function is a safety feature which prevents the window from ascending and will descend a certain distance automatically, if an obstacle is detected, allowing the operator to remove the obstacle.

Note: The front and rear passenger windows can also be operated by the individual window switch mounted on each door. If the rear window isolation switch has been activated, the window switches on rear doors will not work.

Rear Window Disabled Switch

Press the switch (1) to disable the rear window controls (an indicator lamp in the switch pack will illuminate). Pressing it again will restore control.

'Lazy Lock' Function*

'Lazy Lock' function can open or close the windows from outside.

When the Start switch is in the OFF position and the doors are closed, long press the unlock button on the key fob for several seconds till the window starts to open; similarly, long press the lock button on the key fob for several seconds till the window begins to close.

Note: If the battery is de-energised during the window lifting and lowering process, the 'one-touch' up and 'anti-pinch' mode will be suspended. When the battery is energised again, lift the switch briefly and continuously to raise the window to the top and hold the switch in the close position continuously for about 5 seconds. The 'one-touch' up and 'anti-pinch' mode will be recovered.

Sunvisor

The vanity mirror on the driver side should only be used when the car is stationary.

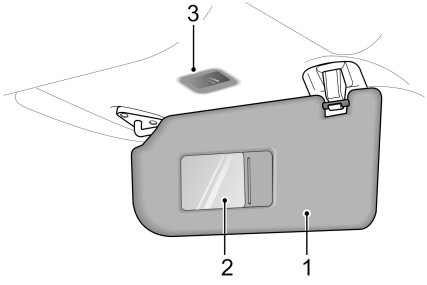

Sunvisors are arranged on the roof ahead of both the driver and the front passenger (1). The sunvisors are provided with vanity mirror (2) and vanity mirror light (3).

Pull the sunvisor downward to use the vanity mirror. A vanity mirror light is switched on when the cover is opened and it is switched off when the cover is closed.

Interior Lighting

Front Interior Lighting

Front Interior Lamp - Type A

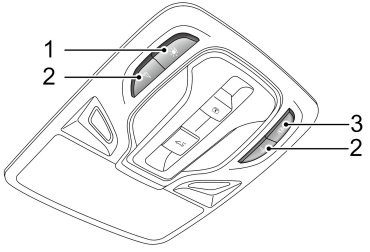

1 Front/Rear Interior Lamp Manual Control Master Switch

2 Corresponding Side Lamp Manual Control Switch

3 Auto Control Switch

Press the master switch (1) to turn on the front and rear interior lamps simultaneously, press the switch again to turn them off.

Press one of the switches (2) to turn on a front interior lamp of the corresponding side. Press the switch again to turn off the lamp.

In addition to manual switch control of interior lamps, the vehicle is provided with automatic control function under some scenarios. Press the switch (3) to enable/disable the function.

When the automatic control function is enabled, the front and rear interior lamps will be turned on automatically whenever the following occurs:

- The car is unlocked;
- Any door is open;
- When the light sensor of the vehicle detects that the ambient light is in dark, the side lamp turns off for 30 s or the side lamp illuminates, switch off the Start switch.

Note: Under normal circumstances, if a door is left open for longer than a certain time, the front and rear interior lamps will go off automatically. In case of low battery, the front and rear interior lights will extinguish in advance.

Front Interior Lamp - Type B

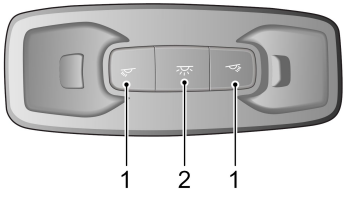

1 Front/Rear Interior Lamp Manual Control Master Switch

2 Corresponding Side Lamp Manual Control Switch

Press the master switch 2 to turn on the front and rear interior lamps simultaneously, pressing the switch again will turn them off.

Press one of the switches 1 to turn on a front interior lamp of the corresponding side, press the switch again to turn off the lamp.

In addition to manual switch control of interior lamps, the vehicle is provided with an automatic control function under some scenarios. The front and rear interior lamps will be turned on automatically whenever the following occurs:

- The car is unlocked;
- Any door is open;
- When the light sensor of the vehicle detects that the ambient light is in dark, the side lamp turns off for 30 s or the side lamp illuminates, switch off the Start switch.

Note: Under normal circumstances, if a door is left open for longer than a certain time, the front and rear interior lamps will go off automatically. In case of low battery, the front and rear interior lights will extinguish in advance.

Rear Interior Lamp

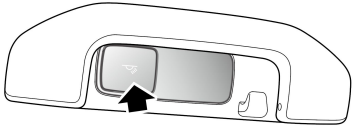

The rear interior lamps are located at left and right sides of ceiling. Press the switch as arrowed to turn on the lamps and press it again to switch off the lamps.

Power Socket

Using the power socket or USB port when the vehicle is not started will cause premature discharging of the vehicle battery and prolonged use may cause a flat battery, meaning the vehicle cannot be started.

Front Console Power Socket

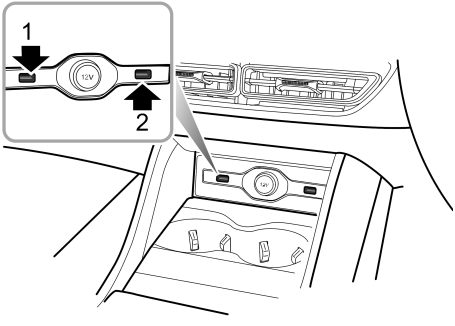

The front USB port is located under the front of the centre console. When the Start switch is in ACC/ON/RUNNING/READY position, the USB port can supply 5V voltage as the power interface.

The maximum operating current of the left USB port is 3 A and the maximum operating current of the right USB port is 2.4A .

The left USB port can also realise data transmission function.

Rear Power Socket

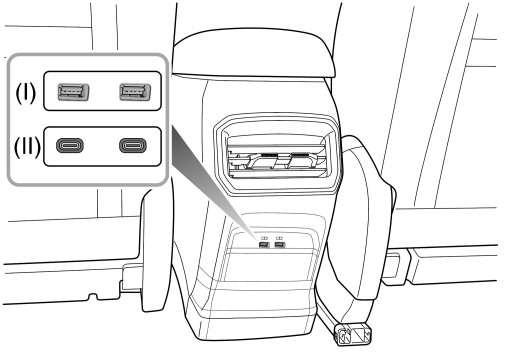

The picture is for reference only, and the appearance may differ with the actual vehicle.

There are also two USB ports equipped at the rear of the centre console. When the Start switch is in ACC/ON/RUNNING/READY position, for type Ⅰ, the USB port can supply 5V voltage as the power interface. Its maximum operating current is 2.4A . For type Ⅱ, the USB port can supply 5V voltage as the power interface. Its maximum operating current is 3A .

Note: The vehicle's USB ports may not support some fast charging devices.

Mobile Phone Wireless Charging*

The wireless charging function can charge a mobile phone under the condition that the mobile phone does not need a wire connection through electromagnetic induction.

Note: It only works with mobile phones certified to the WPC Qi standard.

Wireless Charging of Mobile Phones

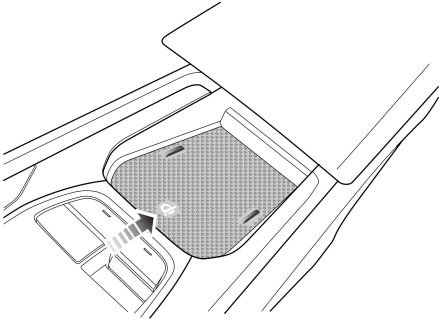

The mobile phone wireless charging area is located rear of the shift lever and the charging function can be used when the Start switch is in the RUNNING/READY position. Place the mobile phone right side up with the back attaching to the charging area for wireless charging.

Note: Only one mobile phone can be charged at a time.

Note: On bumpy roads, the wireless charging function of the mobile phone may intermittently stop and resume. If the mobile phone deviates from the charging area and stops charging, it will need to be placed back in the rechargeable area.

Note: The size of each brand of mobile phone is different and the position of the charging coil on the mobile phone is different. Please adjust the position of the mobile phone accordingly. In addition, the case of some mobile phones may have an impact on wireless charging. It may be necessary to adjust or remove the case to achieve wireless charging.

Note: The charging rate may vary with different models of mobile phones.

If the mobile phone cannot be charged properly, please make sure that there is no foreign matter in the wireless charging area or wait for the wireless charging area to

cool down before further attempt. If the wireless charger continues to fail, seek an MG Authorised Repairer.

IMPORTANT
When the wireless charging system of the mobile phone is being used, make sure that the smart key is 20cm or more away from the wireless charging area. Do not place coins, IC cards, metal keys or other items with a large amount of metal composition in the wireless charging area with your phone. This may result in the failure of wireless charging function and create a safety hazard.

Storage Devices

Instructions for Use

- Please close all storage devices when the car is in motion, leaving these storage devices open may cause personal injury in cases of a sudden take off, emergency braking or a road traffic collision.
- Do not place flammable materials such as liquid or lighters in any storage devices. The heat in hot conditions may ignite flammable materials and lead to a fire.

Glove Box

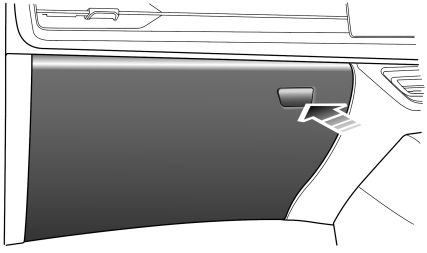

To open the glove box, press the glove box open button (as indicated by the arrow). The glove box light will automatically illuminate.

Push the cover forward to close the glove box. Make sure the glove box is fully closed when the vehicle is being driven.

Storage Box

Driver Side Storage Box

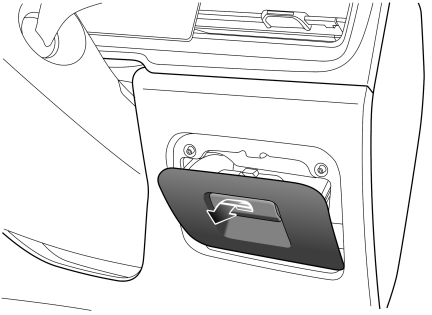

Located beneath the instrument panel on the driver side, pull the storage box lid down to open the box. The storage box can be closed by pushing the storage box cover forwards.

Centre Console Armrest Box

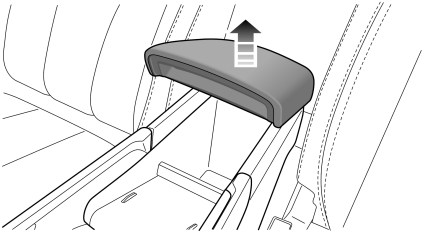

Lift the centre console armrest (as indicated by the arrow) to open the centre console armrest box. Put the centre console armrest down gently to close the centre console armrest box.

Glasses Box*

The glasses box should only be used only when the vehicle has stopped and is stationary.

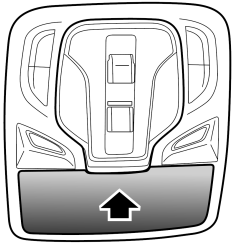

The glasses box is located in the proximity of the front courtesy lights. Press the panel (as indicated by the arrow), and place the glasses into the glasses box after opening it. Close the glasses box when it is not in use.

Note:

Only glasses that feature a standard frame can be inserted into the glasses box.

Cup Holder

DO NOT place cups containing hot drinks on the cup holder to avoid splashing them while driving, causing burns or other unnecessary injuries

Centre Console Cup Holder

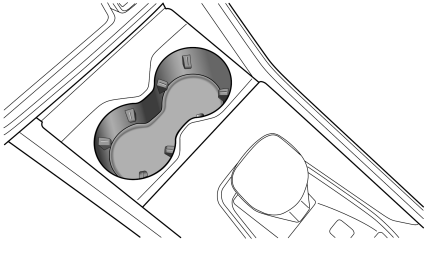

The center console cup holder is located in front the shift control mechanism and can accommodate cups or beverage bottles.

Rear Armrest and Rear Cup Holder

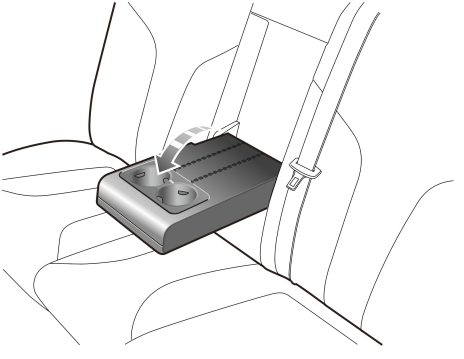

Fold the rear armrest forward to expose the rear cup holders. There are cup holders at the front end of the rear armrest to hold Insert line space below.

IMPORTANT
Please place sealable cups or beverage bottles in the cup holder. Otherwise, the beverage may be spilled and cause damage to the equipment inside the car.

Preparations for Trip

Keys	*106*
Anti-theft Systems	*110*
Alcolock[*]	*115*
Tailgate	*116*
Load Carrying	*122*
Towing	*123*
Fuel System	*128*
Steering System Adjustment	*133*

Keys

Overview

Please keep the spare key in a safe place - not in the car!

It is recommended that spare keys are not kept on the same key ring, since this may cause interference and prevent correct key recognition and therefore prevent the correct operation of the vehicle power system.

The smart key contains delicate circuits and must be protected from impact, high temperature, humidity, direct sunlight and fluid corrosion.



WARNING

The vehicle's keys contain coin/button batteries. These batteries are hazardousand are to be kept away from children (whether the battery is new or used).



WARNING

A lithium coin/button battery can cause SEVERE or FATAL injuries within 2 hours or less if it is swallowed or placed inside any part of the body.



WARNING

If you think batteries may have been swallowed or placed inside any part of the body, please seek medical rescue immediately.

We provide two smart keys, each one includes a backup mechanical key. The mechanical key can be used to unlock the door in an emergency, but cannot be used to start the vehicle.

The keys supplied to you have been programmed for the security system on your vehicle. Any key that is not programmed to your vehicle can not start the car.

The smart key will only work within a certain range. Its working range is sometimes influenced by the key battery condition, physical and geographical factors. For safety consideration, after you lock your car using the smart key, please recheck that the car is locked.

Keys

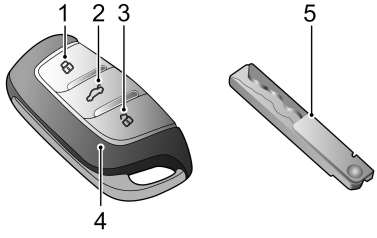

1 Lock Button

2 Tailgate Button

3 Unlock Button

4 Smart Key

5 Backup Mechanical Key

If your key is lost/stolen or broken, a replacement can be obtained from an MG Authorised Repairer. The lost/stolen key will lose the function of starting the power system. If the lost key is found, an MG Authorised Repairer can reactivate it.

Note: Any key made privately may not start the vehicle and may affect the safety of your car. To obtain a suitable key replacement, it is recommended that you consult an MG Authorised Repairer.

Note: The new key cannot be offered to you immediately because it requires programming to the vehicle by the MG Authorised Repairer.

Note: If your car is equipped with induction-type wireless charging function, always keep the key more than 20 cm away from the mobile phone which is being charged to prevent the key from the interference of the wireless charging device.

Note: Avoid operating the smart key close to strong radio interference devices (such as notebook computers and other electronic products), as the normal function of the key may be affected.

Replacing the Smart Key Battery

Please replace the smart key battery in the following conditions:

- You can obviously feel remote distance decrease in operating the smart key;
- The screen displays 'Remote Key Low Battery, Please Replace'.

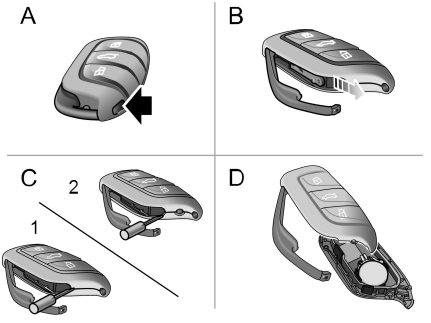

1 Press the button (A) on the smart key to eject the decorative sheet.

2 Take out the backup mechanical key (B) in the arrowed direction.

3 Remove the screw by using a cross flat head screwdriver if there is a screw on your key (As shown in C2; this step only for Australian vehicles.

4 Using a suitable flat bladed tool, insert the tool intothe side of the key (C1), carefully prise off the battery cover and separate the upper and lower casings (D).

Note: Make sure that the polarity of the battery is correct when installing a new battery.

Note: It is recommended to use a CR2032 battery for the remote control.

5 Remove the used battery from the slot.

6 Put the new battery in the slot and make sure it is in full contact with the slot.

7 Refit the cover and press tightly, check if the gap around the cover is even.

8 Use a cross flat head screwdriver to lock the screw if there is a screw on your key (As shown in C2, this step is only for Australian vehicles).

9 Refit the mechanical key and close the decorative sheet.

10 Start the power system to resynchronise the key with the vehicle.

IMPORTANT
• Use of an incorrect or inappropriate battery may damage the smart key. The new replacement's rated voltage, sizes and specifications must be the same as the old one. • Incorrect fitting of the battery may damage the key. • Disposal of the used battery must be strictly in accordance with relevant environmental protection acts.

Anti-theft Systems

Your vehicle is fitted with engine immobiliser and body anti-theft system. To ensure maximum safety and operation convenience, we strongly recommend you to read this section carefully to fully understand the activation and deactivation of anti-theft systems.

Engine Immobiliser

Engine immobiliser is designed to safeguard the vehicle from theft. Only when the immobiliser is deactivated can the vehicle be started.

When the START STOP button on the instrument panel is pressed and a valid key is detected inside, the engine immobiliser is deactivated automatically.

If the message centre displays 'Smart Key Not Found' or 'Please Put the Key in Standby Starting Position' or the engine immobiliser system warning lamp illuminates, please put the smart key in the standby starting position (refer to 'Standby Starting Procedure' under 'Starting and Stopping Power System' of 'Driving' section) or try to use the spare key. If the car can still not be started, seek an MG Authorised Repairer.

Body Anti-theft System

Locking and Unlocking

When the vehicle is locked, the turn signal lamps illuminate three times; when it is unlocked, the turn signal lamps illuminate once.

Operation of Door Lock System (Key)

Key Locking

- Using the remote key to lock: press the lock button on the remote key to lock the vehicle after closing the doors, bonnet and tailgate.
- Using the mechanical key to lock: insert the key into the lockhole and turn counterclockwise to lock the vehicle.

Key Unlocking

- Using the remote key to unlock: press the unlock button on the remote key to unlock the vehicle.
- Using the mechanical key to unlock: insert the key into the lockhole and turn clockwise to unlock the vehicle.

Note: If the Power supply is not placed in the ACC/ON/RUNNING/READY mode or the remote key unlock is not activated within ten seconds or so after unlocking and opening the door with the mechanical key, the vehicle anti-theft alarm system will be triggered.

Note: : When the vehicle is locked, press the UNLOCK button on the remote key and perform no other operations within a period of time and the vehicle will automatically lock.

Find My Car

After the vehicle is locked for several minutes, the Find My Car function is enabled and the audible and visual warning is triggered by pressing the lock button on the remote key. Pressing the lock button on the remote key again to suspend the Find My Car. At this time, press the unlock button on the remote key to cancel the Find My Car function and unlock the vehicle. Find My Car can be set in the 'Vehicle Settings' interface on the entertainment display.

Operation of Door Lock System (Keyless)

The keyless entry system can lock and unlock the doors or open the tailgate as long as you carry the smart key and approach to the car.

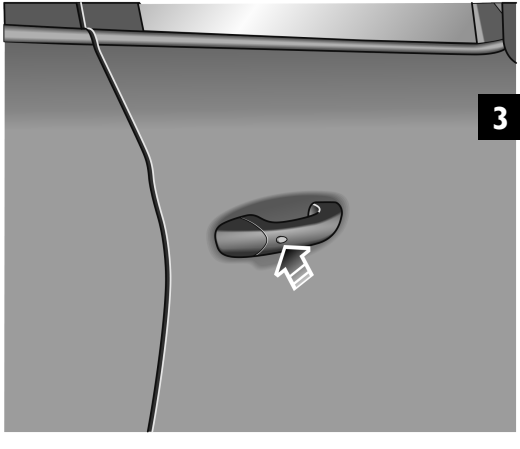

Note: Keep the distance between the smart key and the door handle within the 1.5 m range in order to lock and unlock the doors using the keyless function.

Keyless Locking

After pressing the Start switch to turn off the power system, press the button on the front door handle once (no need to press the Lock button on the remote key) to lock all doors before leaving the vehicle, then the vehicle will enter anti-theft alarm state.

Keyless Unlocking

Press the button on the front door handle once to unlock the vehicle, then pull the door handle to open the door.

Note: When the vehicle is locked, if you are within the smart key range and operate the door handle button but carry out no further action, the vehicle will then automatically lock itself to remain secure.

IMPORTANT
Once the door has been locked by the key, press the button on the door handle to unlock the vehicle. If the vehicle can not be unlocked or locked normally, please contact an MG Authorised Repairer.

Mislock

If locking operation is performed when the driver's door is not fully closed or the Start switch is placed in position ACC/ON/RUNNING/READY , the door will not be locked and the horn will sound once to indicate a mislock, with the body anti-theft system inoperative.

If locking operation is performed when the driver's door is closed but the passenger's door, bonnet or tailgate is not fully closed, the vehicle horn will sound once, indicating a mislock. In this case, the 'partial arming' attributes of the body anti-theft system will enable (all fully closed doors, bonnet or tailgate apertures will be protected, but an open aperture will not!). Once the opened door, bonnet or tailgate is closed, the system automatically enters the complete anti-theft state. For some models, if the remote key is put back in (or left behind) the vehicle and the opened door is closed, the vehicle will be automatically unlocked.

Note: When the vehicle is locked, unlock and open the tailgate only, put (or leave) the remote key in the vehicle again, then close the tailgate, in this case the tailgate will automatically eject and cannot be closed.

Anti-theft Alarm Sound

If the anti-theft alarm has been activated, before it is turned off, the car horn will sound continuously. Press the UNLOCK button on the remote key, the anti-theft alarm will be deactivated.

Interior Lock Switch

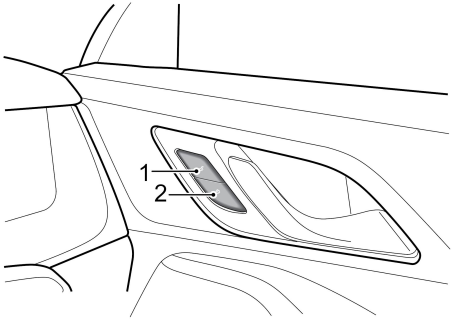

1 Unlock Switch

2 Lock Switch

When the body anti-theft system is not in operation, press the interior lock switch (2) after closing all doors to lock all doors; press the unlock switch (1) to unlock all doors.

Note: If the vehicle anti-theft system is set, pressing the lock/unlock switch of the interior locks will not lock/unlock doors but will trigger the alarm system.

If the doors, bonnet or tailgate is closed, press the interior lock switch and the yellow indicator on the lock switch illuminates.

If the non-driver door, bonnet or tailgate is not fully closed, press the interior lock switch, the yellow indicator on the lock switch flashes.

Interior Door Handles

When the vehicle anti-theft alarm system is not active, use the interior door handle to open the door:

1 Pull the interior door handle once to unlock the door.

2 Release and then pull the interior door handle again to open the door.

When the anti-theft alarm system is activated by locking the vehicle with the remote key, the interior door handles will not be operational due to super lock of the doors. Please ensure people or animals do not remain in the vehicle when locking the vehicle with the remote key as they wil be unable to exit the vehicle and there is a risk of injury or death.

Auto Lock When Driving

All the doors will be locked automatically when the road speed exceeds 15 km/h.

Automatic Unlock When Flameout

When the Start switch is turned off, doors will be unlocked automatically.

Alcolock*

The alcohol lock is just a detection device used to assist in limiting drivers from driving when the alcohol concentration exceeds the limit. Please remember that you are always the first person responsible for road traffic safety. For the safety of you and other traffic participants, drink driving is illegal!

To operate the alcohol lock device, hold the handheld device and blow into the mouth piece/orifice, by providing a breath sample the blood alcohol concentration will be analysed . If the levels are below the preset limit you will then be able to start the vehicle.

Note: The handheld device should be placed in a position that is easy to access and does not affect driving. Please contact an MG Authorised Repairer to help you install and debug the alcohol lock.

IMPORTANT
If the alcohol test fails, for safety reasons, do not attempt to forcefully start the vehicle. If you suspect a malfunction with the alcohol lock device, please contact an MG Authorised Repairer.

Tailgate

Manual Tailgate *

If the tailgate can not be closed or the weatherstrip between the body and tailgate is fractured, be sure to close all windows when driving, select the face distribution mode of the air conditioner and set the blower to maximum speed, so as to decrease exhaust fumes entering the vehicle.

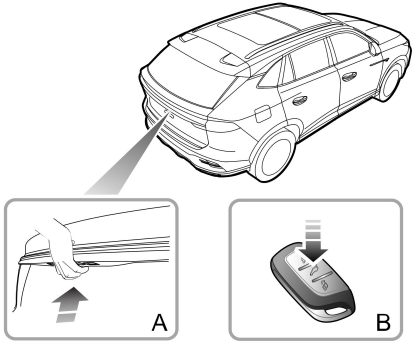

Manual tailgate can be opened by the following 2 ways:

1 Long press the tailgate open button (B) on the key for more than 2 seconds to open the tailgate, then lift and open the tailgate;

2 When the vehicle is unlocked or the matched key appears within 1 m range around the tailgate, directly press the open switch (A) on the tailgate to open the tailgate.

Electric Tailgate *

If the tailgate can not be closed due to the type of cargo loaded or if the weatherstrip seal is damaged, it is recommended you close all windows when driving, select the face distribution mode of the air conditioning and set the blower to maximum speed, so as to decrease any fumes entering the vehicle.

Prior to opening or closing the tailgate always ensure there are no people or objects that may obstruct operation. This may cause physical harm or damage.

The electric tailgate can only be operated when the vehicle is in P/N gear.

While opening/closing the tailgate, the system will provide users with reminders through buzzer alarms.

Electric Tailgate Open/Close Mode

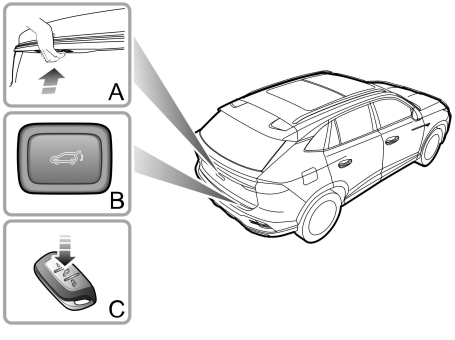

Electric tailgate can be opened or closed by the following ways:

- ***Opening/Closing the tailgate from outside the vehicle:*** When the vehicle is unlocked or the matching key is within 1 meter of the tailgate perimeter, press button (A) and the electric tailgate will open; press button (B) and the electric tailgate closes.

- ***Opening/Closing the tailgate with the smart key:*** When the Start switch is off, long press the tailgate button on the smart key (C) and the tailgate opens or closes automatically.
- ***Opening/Closing the tailgate from inside the vehicle:*** Click the tailgate switch on the entertainment display to open or close the tailgate.

Note: In case of an extreme slope, the tailgate may not be electrically opened or fully closed due to the change of centre-of-gravity position.

If the tailgate fails to be properly opened to the preset height or fully closed, manually close it once slowly and completely to recover the functions of the electric tailgate system.

Note: During manual operation of the electric tailgate, avoid violent or rapid operation, so that the electric tailgate system will not be damaged.

Foot Kick Sensing Function*

When a valid smart key is within the effective range of the tailgate, the tailgate can be opened by the foot kick sensing function.

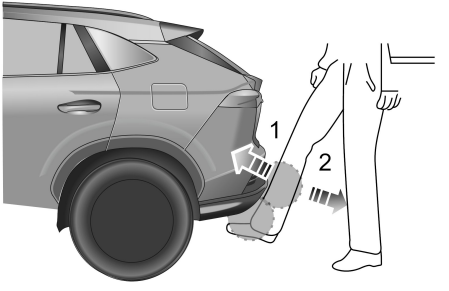

To open the tailgate by foot kick sensing, stand in the middle of the rear of the vehicle as far as possible, move your foot and lower leg quickly to a position as close to the rear bumper as possible (1), your lower leg must be in the upper sensor area and your foot must be in the lower sensor area,

then move your foot and lower leg quickly away from the sensor area (2) and the tailgate will open automatically.

The foot kick sensing function can be set on or off with a soft switch on the entertainment display as needed. When washing your car or performing maintenance and service work near the rear bumper, to prevent the tailgate from opening by accidentally triggering the sensing function, please first turn off the foot kick sensing function with the soft switch on the entertainment display.

In some cases, the tailgate opening by foot kick sensing method will not be available or will be limited, so you can open the tailgate in other ways.

Anti-pinch Function

Function ON: In case any object that may interfere with the opening of the tailgate is detected, the tailgate will stop opening and close back at a certain angle to alert the user about the obstacle.

Function OFF: In case any object that may interfere with the closing of the tailgate is detected, the tailgate will stop closing and open back at a certain angle to alert the user about the obstacle.

Note: If the electric tailgate is operated several times in a short period of time and triggers the thermal protection, the system will suspend the electric opening and closing function for protective reasons. In this situation, manually close the tailgate completely once and wait for more than three minutes to resume the function of the electric tailgate system.

Note: If the electric tailgate anti-pinch function is activated for multiple times consecutively, the system will suspend the electric opening and closing function for protective reasons. In this situation, manually close the tailgate completely once to resume the function of the electric tailgate system.

Opening Height Setting of Electric Tailgate

Users can set the opening height of the electric tailgate as needed by using the Close button at the tailgate or the entertainment display. The electric tailgate controller will record the new opening height.

Setting mode 1:

1 Place the tailgate to desired setting height and keep it stationed.

2 Press and hold the Close button at tailgate for 3s, the buzzer will make a sound to indicate the setting was successful.

Setting mode 2:

1 Open the entertainment display screen, enter the tailgate height setting interface and set the desired height position.

Note: If the electric tailgate system develops a fault, the relevant warning message 'Electric Tailgate System Failure' and icon will be displayed in the message centre of the instrument pack, please seek an Authorised Repairer for service.

Emergency Tailgate Release

The tailgate emergency open switch is located in the inner side of the tailgate lock.

Lower the rear seat to make sure the emergency open lockhole plug on the tailgate trim panel can be accessed.

Rotate the emergency release counterclockwise with a suitable tool to open the tailgate from inside.

Electric Tailgate *

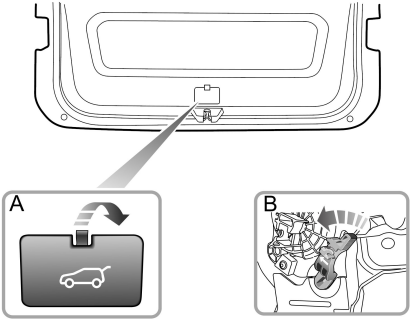

Manual Tailgate *

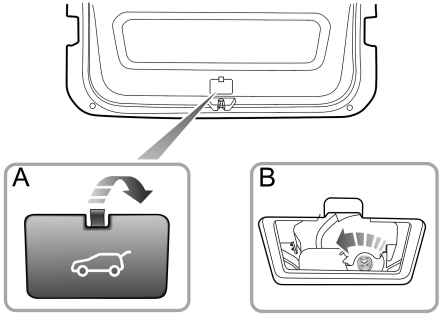

Load Carrying

DO NOT exceed the gross vehicle weight or the permitted front and rear axle loads. Failure may result in vehicle damage or serious injury.

Load Space

Ensure that the rear seat backrests are securely latched in the upright position when loads are carried in the load space behind the seats.

When luggage is carried in the load space, always ensure heavy items are placed as low and as far forward, as possible, so as to avoid the cargo shift in the event of an accident or sudden stop.

Drive carefully and avoid emergency braking or maneuvers when large or heavy items are carried.

IMPORTANT
Traffic regulations must be observed when loading cargo, if the cargo extrudes the loadspace, appropriate warning measures must be taken to warn other road users.

Internal Loading

DO NOT carry unsecured equipment, tools or luggage that could move, causing personal injury in the event of an accident, emergency braking or hard acceleration.

DO NOT obstruct the driver's or passenger's vision with loads.

Folding the rear seats can increase luggage space, refer to 'Seat Adjustment' described in 'Comfort Systems' chapter.

Towing

Towing Function

Towing Device Safety Precautions



Exceeding any load limits advised by MG Motor is dangerous. Consult the recommended load limits and loading prior to any journey.



Excessive towing loads reduce front tyre traction and steering control, too little trailer nose load can make the trailer unstable and cause it to sway.

Please be sure to read the towing guidelines carefully, use approved equipment and comply with load limits and always check load limits before towing.

Towing a load exceeding the maximum towing weight will severely affect the manoeuverability and performance of the vehicle, which may cause damage to the vehicle and driveline.

When fitting a towing device to your vehicle:

When towing: All lights at the rear of your vehicle must remain visible to road users behind your vehicle and must not be fully or partially blocked.

If the light sources are blocked when towing, auxiliary light sources such as light panels shall be used.

When not towing: The fitted towing device must not block any light sources. If the towing device fully or partially blocks a light source (such as fog lamp), it must be removed or retracted when not towing.

Tow Bar

It is recommended to fit the original tow bar approved by MG and use the specified connection method to secure the traction frame. Please contact an MG Authorised Repairer for more details.

Safety Chain

Safety chain must be used to prevent the trailer from being accidentally decoupled. Ensure that the safety chain is securely attached to the trailer and your vehicle before starting off.

Altitude

When towing a trailer in mountainous areas, reduce the total weight of the vehicle and trailer by at least 10% for every 1000 m of elevation.

Gradient

When towing, you should plan your driving route to avoid steep slopes as much as possible. The maximum driving gradient should not be greater than 12% when towing. Try to select driving roads recommended by the Towing Association.

Run-in Period

It is recommended to avoid towing a trailer within the first 621 miles of your vehicle.

Stop/Start Function

When towing, please disable the Stop/Start function, so that the weight of the trailer does not affect the braking performance of the vehicle.

Trailer Mode

When towing is required, please turn on the trailer mode function of your vehicle, which can be turned on or off in the following ways:

1 Auto On/Off: The vehicle automatically enters or exits the trailer mode when the electrical connection between the trailer and your vehicle is connected or disconnected.

2 Manual On/Off: Turn on or off this function on the entertainment display.

Note: When towing mode has been turned on in Auto Mode, the towing function could not be adjusted manually on the entertainment display.

In the towing mode, some functions of the vehicle will be limited or turned off, such as:

- Automatic emergency braking;
- Adaptive cruise control system;
- Traffic jam assist system;
- Lane keeping assist system;
- Rearward driver assistance system;

Note: If the towed device is equipped with a tail light cluster, the vehicle also controls the trailer's lights after connecting the electrical connection.

Note: When operating the rear fog lamps, the trailer's rear fog lamps will also operate.

Towing Parameters

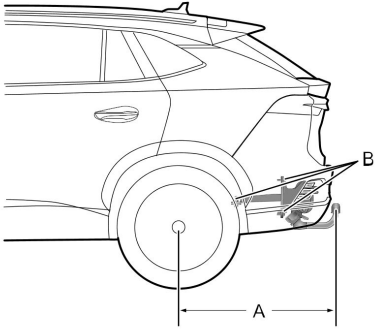

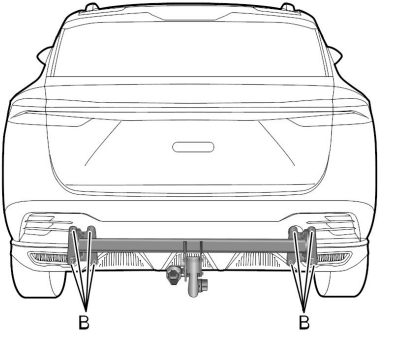

Item, Parameter	Parameter Value
Maximum towing mass (without brakes), kg	750
Maximum towing mass (with brakes), kg	1500
Maximum net load at the coupling point, kg	75

Item, Parameter	Parameter Value
Distance from wheel centre to tow hook centre point (A), mm	986
Towing device mounting point	B

Note: When towing a trailer, the vehicle speed MUST not exceed 62 mph (100 km/h).

Note: Prior to towing a trailer, please check the rear tyre pressures, inflate to at least 20 kPa (0.2 bar) above the recommended pressure - DO NOT allow the tyre pressure to exceed 300 kPa (3.0 bar), this can be dangerous.

Fuel System

Fuel Requirements

Only automotive fuel that meets national standards and is of a grade recommended by the OEM is permitted! Using other grades of fuel may damage your vehicle's fuel system, engine-related components and exhaust system.

Please carry out refuelling according to the information on the refuelling label. Refer to 'Main Engine Parameters' in the 'Technical Data' chapter for details.

E5: Unleaded petrol fuel containing a maximum 2.7% (m/m) of oxygen and a maximum 5% (v/v) of ethanol.

E10: Unleaded petrol fuel containing a maximum 3.7% (m/m) of oxygen and a maximum 10% (v/v) of ethanol.



You may hear a knocking noise from the engine if the wrong fuel is used. Please use the gasoline of the recommended grade as soon as possible. If a serious knocking noise can still be heard after the gasoline of the recommended grade is used, please go to an MG Authorised Repairer for service urgently.

Fuel Filler

DO NOT use high pressure jet washer to flush fuel filler flap area when washing your vehicle.

Note: The fuel filler flap can only be locked when the door is locked.

Note: Do not forcefully open the fuel filler door when it is not unlocked.

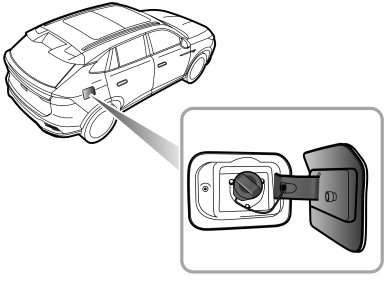

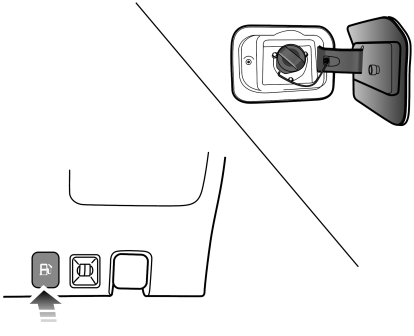

Fuel Filler Flap - Fuel Vehicles/HEV Vehicles

The fuel filler flap is located at the rear right of the vehicle. Its lock is connected with central control door lock system. Press the left side of the flap to open it when the door is unlocked.

Fuel Filler Flap - PHEV Vehicles

The fuel filler flap is located on the right rear side of the vehicle. This vehicle model uses a high-pressure fuel tank system and the pressure inside the fuel tank will be higher than atmospheric pressure; before opening the fuel filler

flap, please press and hold the fuel filler flap release switch for (Located on the lower right side of the driver side instrument panel) for about 2 seconds and then release, the system will begin relieving the pressure within the system. When the instrument pack displays 'Please wait to refuel...' . Once the refuelling preparations have been completed, the instrument pack will display 'Please refuel'. An audible click can then be heard and the fuel filler flap can be opened.

In the rare circumstance, where the fuel filler flap may fail to open or it has been over 30 seconds after the fuel filler flap release switch has been pressed for the first time, please press the switch a second time in order to completely relieve the pressure in the system. When the fuel flap opens, please unscrew the fuel filler cap slowly before refueling. In such a case, the fuel gun may need to be shut off in advance. Please contact an MG Authorised Repairer for service as soon as possible.

When the instrument pack displays 'Refueling System Failure', it indicates that a fault has been detected within the fueling system. In this case, please contact an MG Authorised Repairer for service as soon as possible.



Please ensure that the vehicle is in Park (P gear) before refueling. When the vehicle is not in Park, pressing and releasing the fuel filler flap release switch will prompt the following message: 'Please Shift to P Gear Before Refueling'.



When the vehicle is in Park (P gear) and with the power system on, pressing and releasing the fuel filler flap release switch will automatically shut down the vehicle. If the power system is not turned off, the instrument panel will prompt the following message: 'Please Turn off before Refueling'. At this time, the driver will need to turn off the vehicle before refueling.

Once the vehicle has been refueled, please close the fuel filler flap in time and the system will automatically lock the flap once it's closed; the corresponding prompt will also be displayed on the instrument pack.

When the instrument panel displays 'Fuel Filler Flap Open', stop the vehicle as soon as safety permits and then close the fuel filler flap.

If the fuel filler flap has not been closed, the release switch will still need to be pressed before refueling. The fuel filler flap can only be opened after the refueling preparations have been completed by the integrated systems, otherwise harm or personal injury may occur.

Note: Do not forcefully open the fuel filler door when it is not unlocked.

Fuel Filler Cap

Slowly rotate the fuel filler cap counterclockwise to release the pressure inside the tank before opening it.

After refuelling, replace the fuel filler cap and tighten it till you hear a 'click'.

If the fuel filler cap is not tightened, the engine emission malfunction indicator lamp on the instrument pack may illuminate. Please tighten the fuel filler cap in this case. If the lamp remains on, please contact an MG Authorised Repairer for service as soon as possible.

Refuelling

Vehicle fuel is highly flammable and in confined spaces can be extremely explosive.

Always take care when refuelling:

- Stop the power system;
- Do not smoke or use a naked flame;
- Do not use a mobile phone;
- Prevent fuel spillage;
- Do not overfill the tank.

Do not fully refuel the tank if the vehicle is to be parked in direct sunlight or high ambient temperature - expansion of the fuel could cause a spillage.

After refuelling, if the engine runs unevenly, shut down the engine and seek an MG Authorised Repairer before attempting to restart the engine.

IMPORTANT
When performing refilling operations, prevent oil from splashing on the paint or adjacent appearance part surfaces, otherwise damage may be caused to the paint or part surfaces.

Steering System Adjustment

Steering Wheel Position Adjustment

DO NOT attempt to adjust the position of the steering wheel while the car is in motion. This is extremely dangerous.

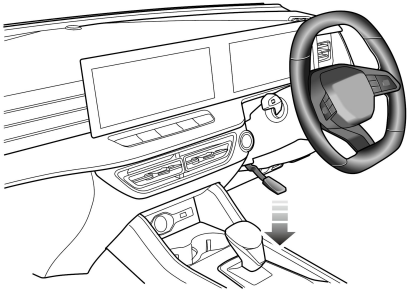

Adjust the position of the steering wheel to suit driving posture:

1 Fully release the locking lever (as arrowed).

2 Hold the steering wheel with both hands and tilt the steering column up or down to adjust the steering wheel height; push and pull the steering wheel to adjust the distance between the steering wheel and the driver.

3 Once a comfortable driving position has been selected, pull the locking lever fully up to lock the steering wheel into its new position.

Electric Power Steering

If the electric power steering fails, the steering may appear very heavy, which will significantly affect driving safety.

All models of this series are equipped with an electric power steering system. The system works only after the vehicle is started.

The system provides continuous steering feel setting. Please start the vehicle when it is stationary, turn on the entertainment display, enter the steering feel adjustment interface and change the setting by dragging as needed.

1 Light: provides high steering power, with a light feel.

2 Steady: provides low steering power with a steady feel.

IMPORTANT
When EPS is working, holding the steering wheel on full lock for long periods will result in a reduction in power assistance, causing a heavier feel to the steering.

When the battery is reconnected after it has been disconnected, the electric power steering (EPS) warning lamps may illuminate in yellow. In this case, the electric power steering (EPS) requires intialisation, i.e., rotate the steering wheel from lock to lock; after the initialisation is complete, the warning lamps will extinguish.

Steering Wheel Heating*

Some models in this vehicle are equipped with steering wheel heating function. The heating function can improve driving comfort in low temperature environments. The heating function can be turned on or off through the switch on the entertainment display screen.

Drive the Vehicle

Starting and Stopping Engine *136*

Economical and Environmental Driving *139*

*Automatic Transmission** *143*

*Dual Clutch Automatic Transmission** *148*

*Manual Transmission** *153*

*Electric Drive Unit** *155*

*Driving Mode** *160*

*Kinetic Energy Recovery Mode** *161*

*Power Source Setting** *162*

Electronic Parking Brake (EPB) *163*

Service Brake *166*

Starting and Stopping Engine

Start Switch



The keyless start switch is located on the instrument panel and is a push-button start switch. To operate the system, the smart key must be in the car.

Each display state of the Start switch is described as follows:

Indicator Off (OFF)

The power system is OFF in this position.

Yellow Light (ACC)

When it is in OFF state, press the Start switch once only to enter ACC state and the yellow light of the Start switch illuminates and some electrical appliances (such as the power window, etc.) can operate.

Green Light (ON/RUNNING/READY)

- When it is in ACC state, if no other operation is required, press the Start switch again and the power system will not start, the vehicle is in ON state, the green light on the Start switch illuminates and some electrical appliances such as the instrument can work.
- All electrical appliances can work after the power system is started and the vehicle is in RUNNING/READY state.

Note: When the START/STOP Switch is turned off and a door is opened, if the key is still in the car, the horn will sound in succession when the door is closed. The warning sound will emit when the door is opened again and the warning icon and prompt message will be displayed in the instrument pack to indicate that Please Take Your Key.

Strong radio signals may interfere with the keyless start system. If your vehicle is close to strong radio signals, then push-button start may be inoperative.

Starting Power System

Do not start and run the engine for a long time in an unventilated room. Exhaust fumes are harmful and contain carbon monoxide, which can cause unconsciousness or even death.

Starting Procedure

1 Switch off all unnecessary electrical appliances (including the air conditioning);

2 Ensure the shift lever is in P position and press the brake pedal;

3 Press the Start switch and immediately release it after the power system is started.

Standby Starting Procedure

When the vehicle is in a strong radio signals interference area or the smart key low battery occurs, please start the vehicle by the standby starting procedure according to the following steps:

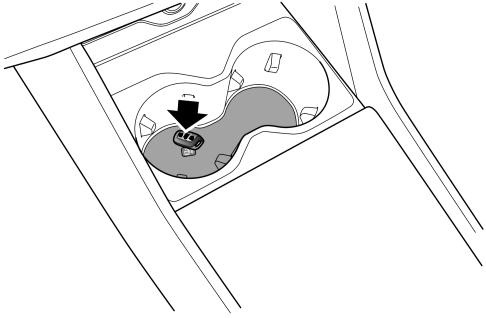

1 Place the smart key to the position and at the angle as illustrated.

2 Place the shift lever in P position, depress the brake pedal, press the Start switch and start the power system.

After the battery of smart key is replaced or the car leaves the interference area, if the keyless starting procedure can still not be used normally, seek an MG Authorised Repairer.

IMPORTANT
• If three consecutive attempts to start are unsuccessful, please seek assistance. Otherwise, multiple consecutive starts may cause damage to the power system and battery. • This car is equipped with an anti-theft system. Any privately prepared key cannot start the vehicle. • In environments with temperatures below -10 degrees Celsius, the time for the power system to start will increase. Therefore, when starting, turn off all unnecessary electrical equipments.

OFF

Stop the vehicle power system as follows:

1 After bringing the car to a stop, ALWAYS press the brake pedal;

2 Apply the parking brake;

3 Place the shift lever in P position;

4 Press the Start switch to stop the power system.

Economical and Environmental Driving

Running-in

The brakes and tyres need time to 'bed-in' and adjust to the demands of everyday motoring. Therefore, in order to enhance the long-term operation performance, try to avoid rapid acceleration, rapid deceleration or emergency braking during the first 1,500 km (1000miles) .

Environment Protection

Your car has been designed with the latest technology in order to minimise hazards to the environment.

Economic Driving

The way in which you drive your car has a significant bearing on the life span of the car, as well as affecting the energy consumption.

Drive Smoothly

Traveling at a suitable constant speed is more energy saving than frequent braking and acceleration. Avoid making hard acceleration, sudden start-off and emergency brake. Steady acceleration or deceleration uses considerably less energy than rapid acceleration or emergency braking, and minimises the wear to mechanical components.

Avoid Driving at Maximum Speed

Both energy consumption and noise levels increase significantly at high speeds.

Driving Foreseeingly

Avoid roads with traffic congestion or traffic jams. Foresee road congestion as early as possible and keep enough distance to the front car during driving, and slow down in time. Avoid stamping on the brake pedal for a long time if

there is no braking need, which will cause premature wear of friction plate.

Proper Use of Auxiliary Electrical Equipment in Car

Although it is essential to keep comfortable interior environment, the use of interior auxiliary electrical equipment will increase energy consumption.

Driving in Special Environment

Driving in Rain or Snow

Emergency braking, accelerating and steering on slippery roads will reduce the vehicle's handling performance and grip.

- If the window or windshield fogges up, please use the air conditioning defogging function; If there is water film on the rearview mirror or fog on the rear windshield, please use the external rearview mirror and rear windshield heating function.
- If the road surface is frozen or covered with snow, the friction between the tires and the road surface becomes very small, making it highly prone to accidents. Please stop driving; Or install a suitable anti-skid chain before driving, refer to 'Tires' in the 'Maintenance' section

Driving through Water

Do not venture into low-lying waterlogged roads or unknown water wading areas, as this may result in power system failure, serious vehicle malfunctions (such as electrical component short circuits, etc.), or damage to the power system due to water ingress! Any vehicle malfunction or damage resulting from this will no longer be covered by our warranty terms.

When driving a vehicle, try to avoid passing through waterlogged roads or areas with puddles as much as possible. If you need to drive through water, please follow the following suggestions:

- Before entering the flooded section, the depth of the water must be clear and the height of the water should not exceed the lower edge of the vehicle body;
- If you want to drive through water, you will need to turn off the air conditioning before starting, lightly step on the accelerator pedal without releasing your foot, smoothly and slowly pass through the flooded road section, and control the speed within 6.2 mph (10km/h);
- Do not reverse in water or park the vehicle in stagnant water. If driving through water causes the vehicle to stall, please do not attempt to start the vehicle again. Please contact an authorized after-sales service center for inspection;
- After passing through water, please lightly press the brake pedal continuously to confirm that the braking performance is normal and avoid emergency braking;
- After passing through water, please check if the lighting and horn functions are normal;
- After wading through water, it may affect the functionality and performance of the vehicle. It is recommended to contact an authorized after-sales service center for inspection in a timely manner.

IMPORTANT

- When there is water or mud on the surface of the brake discs, it may cause a decrease in braking performance and thus prolong the braking distance. Please drive carefully to prevent accidents.
- Wet brake pads may not function properly. If only one brake can operate properly, it can affect steering control and cause accidents.
- After water enters the interior of high-voltage components, it has a significant impact on their insulation properties. Water contains a lot of conductive substances, which may cause internal short circuits in high-voltage components, seriously affecting vehicle safety and driving performance.

Check and Service

Check Tyre Pressures Regularly

Over or under-inflated tyres wear out more rapidly and also have a detrimental effect on the car's handling characteristics. Under-inflated tyres increase the rolling resistance of the car which, in turn, increases energy consumption.

Do not Carry Unnecessary Loads

The additional weight of unnecessary loads wastes energy consumption, especially in stop/start conditions where the car is frequently required to set off from stationary. Avoid sticking mud, etc. to vehicle chassis, which not only will reduce body weight, but also can prevent body corrosion.

Maintain Correct Four-Wheel Alignment

Avoid collision with the kerb and reduce speed on uneven road surfaces. Incorrect four-wheel alignment not only will cause premature tyre wear, but also will increase power load and energy consumption.

Automatic Transmission*

Instructions for Use

The following information is very important; please read carefully before use:

- Before starting the vehicle, close the doors, make sure the vehicle is in P gear, press the brake pedal and activate the EPB system.
- After starting the vehicle, with the brake and EPB still applied, shift into the desired gear.
- Turn off the EPB, keep the brake pedal depressed until you are ready to manoeuvre the vehicle. On a flat road, once the brake pedal is released, the vehicle will automatically start to travel at a slow speed with the accelerator pedal not depressed.
- DO NOT coast in neutral while the vehicle is in motion, as this could result in serious damage to the automatic transmission or lead to an accident, resulting in injury or even death.

Gear Shift

DO NOT shift from D to R or P while the vehicle is moving, as this could cause serious damage to the automatic transmission or lead to an accident, resulting in injury or even death.

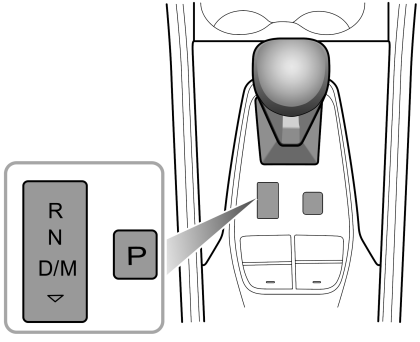

The automatic transmission is a 9 -speed transmission.

There is a P gear button next to the gear display.

The shift knob resides in the centre steady state position, with two non-steady state positions forward or backward, i.e., the shift knob returns to the centre steady state position once released.

- P Park

  When the shift lever is in this position, the transmission will be mechanically locked. Use this gear when the vehicle is stationary and the EPB is applied.

  Press the P button and the vehicle will shift into Park gear.

  Note: Turn off the Start switch and the vehicle will automatically shift into P gear.

  Note: With the brake pedal released, the driver seat belt unfastened and the driver's door open, the vehicle will shift to P gear automatically.

  Note: When the vehicle is parking on a slope, press the brake pedal and apply the EPB before putting into P gear.

- R : Reverse

  Select this gear only when the vehicle is stationary and the driver has the intention to drive backwards.

  Depress the brake pedal and push the shift knob forward to the end and the vehicle will go to into the reverse gear.

- N Neutral

  Select this gear when the vehicle is stationary and the engine is running at idle speed for a long time (for example, waiting for traffic lights).

  With the vehicle in P gear, depress the brake pedal, push the knob forward or backward to the first non-steady state position and the vehicle will shift into Neutral gear.

  With the vehicle in R gear, push the knob backward to the first non-steady state position and the vehicle will shift into Neutral gear.

  With the vehicle in D/M gear, push the knob forward to the first non-steady state position and the vehicle will shift into Neutral gear.

- D Drive

  Drive gear is used for normal driving and allows automatic selection of drive gears depending on vehicle speed and accelerator pedal position.

  With the vehicle in P/R/N gear, depress the brake pedal and push the knob backward to the end and the vehicle will go into the drive gear.

  With the vehicle in M gear, push the knob backward to the end and the vehicle will go into the drive gear.

- M : Manual Mode

  Select this mode to shift manually when required. The instrument interface will indicate current gear of the vehicle with M1-M9 .

  With the vehicle in D gear, push the knob backward completely, to place the vehicle in manual mode. The manual mode is used in conjunction with the shift paddle on the steering wheel.

  Toggle the shift paddle to ' + ' to upshift to an adjacent higher gear; toggle the shift paddle to ' - ' to downshift to an adjacent lower gear.

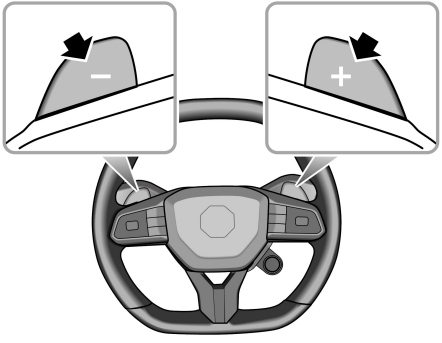

Under manual mode, if the driver makes an unreasonable gear selection, such as requests an upshift during low engine speeds or requests a downshift during high engine speeds, the transmission will not respond and will remain in the current gear. When the vehicle drives in a certain gear and the engine speed is lower than a certain value, the transmission will automatically downshift to an adjacent lower gear to avoid engine flameout; when the vehicle accelerates and the engine speed rises up continuously to the

maximum speed allowable by the gear, the transmission will automatically upshift to an adjacent higher gear to protect the engine if there is no upshift request.

In manual mode, push the electronic shift knob backward to the end to exit manual mode.

Note: In D gear, operate the shift paddle to quickly enter the temporary manual mode or switch gears. If the shift paddle is not operated for a long period of time, it will automatically return to D gear.

Kick-down

The drive wheels may skid when kick-down is activated on road surfaces with low adhesion, this may lead to the vehicle sliding out of control.

With D gear selected, pressing the accelerator pedal all the way down in one motion (also known as Kick-down) will provide better acceleration performance during overtaking. At certain speeds, it will allow the transmission to shift to a lower gear immediately and provide fast acceleration. Once the accelerator pedal is released, it will resume a suitable higher gear (based on the vehicle speed and the position of the accelerator pedal).

Protection Mode

When parking the vehicle, please ensure the vehicle is parked safely and that all traffic by-laws are observed.

Automatic Transmission Overheat Protection

The automatic transmission may become very hot during frequent starts in hot environments or when the transmission is overloaded. To prevent transmission damage, the system will perform the overheat protection function and the instrument pack interface will display 'High transmission temperature, please drive with caution'.

The vehicle can still be driven but the transmission will perform torque limiting control to reduce transmission temperature. As the vehicle is driven and the transmission temperature drops to the normal range, the warning message in the instrument pack interface disappears and the transmission function returns to normal.

If the overheating alarm occurs frequently when the vehicle is driving smoothly, please seek an Authorised Repairer immediately.

Limp Mode

When some failures occur, the transmission will enter Limp Mode and will only function in some gears, in some cases it may fail to reverse, during this time the instrument pack interface will display the engine emission malfunction indicator lamp. If this occurs, please contact an Authorised Repairer immediately.

Note: In Limp Mode, manual mode is disabled.

Transmission Fault

When the transmission detects a serious fault, the engine emission malfunction indicator lamp will illuminate, at which point the system will forcibly cut off the power transmission in order to protect the transmission and the vehicle will not be able to be driven! If this occurs, please contact an Authorised Repairer immediately.

Gear Shift System Failure

When certain failures occur in the gear shift system, the P gear button indicator next to the gear display will flash. Please stop the vehicle as soon as safety permits and apply the EPB.

When this happens to the gear shift system, seek an Authorised Repairer immediately.

Dual Clutch Automatic Transmission*

Instructions for Use

The following information is very important; please read carefully before use:

- Before starting the vehicle, close the doors, make sure the vehicle is in P gear, press the brake pedal and activate the EPB system.
- After starting the vehicle, with the brake and EPB still applied, shift into the desired gear.
- Turn off the EPB, keep the brake pedal depressed until you are ready to manoeuvre the vehicle. On a flat road, once the brake pedal is released, the vehicle will automatically start to travel at a slow speed with the accelerator pedal not depressed.
- DO NOT coast in when driving, it could damage the transmission or cause an accident.

Gear Shift

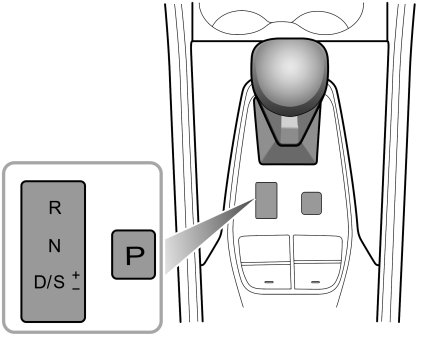

The transmission is a 7 - speed wet dual clutch automatic transmission.

The shift knob resides in the centre steady state position, with two non-steady state positions forward or backward, i.e., the shift knob returns to the centre steady state position once released.

Note: When moving out of the P gear or entering the R gear, the brake pedal must be applied.

- P : Park

  When the shift lever is in this position, the transmission will be mechanically locked. Use this gear when the vehicle is stationary and the EPB is applied.

  Press the P button and the vehicle will shift into Park gear.

  Note: When the Start switch is turned off, the vehicle will automatically shift into P gear.

  Note: With the brake pedal released, the driver seat belt unfastened and the driver door open, the vehicle engages P gear automatically.

- R : Reverse

  Select this gear only when the vehicle is stationary and the driver has the intention to drive backwards.

  Depress the brake pedal and push the shift knob forward to the end and the vehicle will go into reverse gear.

- N : Neutral

  Select this gear when the vehicle is stationary and the engine is running at idle speed for a long time (for example, waiting for traffic lights).

  With the vehicle in P gear, depress the brake pedal, push the knob forward or backward to the first non-steady state position and the vehicle will shift into the Neutral gear.

  With the vehicle in D gear, push the shift knob forward to the first non-steady state position and the vehicle will shift into the Neutral gear.

  With the vehicle in R gear, push the knob backward to the first non-steady state position and the vehicle will shift into the Neutral gear.

- D : Drive gear

  This is used for normal driving and will allow automatic selection of Drive gear depending on vehicle speed and accelerator pedal position.

  With the vehicle in P gear, depress the brake pedal and push the knob backward to the end and the vehicle enters drive gear.

  With the vehicle in R/N gear, push the shift knob backward to the end and the vehicle enters drive gear.

- S : Sport Mode

  Select Sport mode when better acceleration performance is required. Format spacing here Sport mode, the transmission upshifts later, so as to make full use of the power reserves of the engine.

With the vehicle in D gear, push the knob to right and the vehicle will enter Sport mode.

Driving in Sport Mode will increase energy consumption.

To exit Sport mode, push the knob to left.

- Manual Mode

  With the vehicle in S gear, push the knob forward or backward to enter manual mode. The instrument pack interface displays the current gear of the vehicle.

  Move the knob towards ' + ' direction to upshift to an adjacent higher gear; or move the knob towards ' - ' to downshift to an adjacent lower gear.

  Under manual mode, if the driver makes an unreasonable gear selection, such as requests an upshift during low engine speeds or requests a downshift during high engine speeds, the transmission will not respond and will remain in the current gear. When the vehicle drives in a certain gear and the engine speed is lower than a certain value, the transmission will automatically downshift to an adjacent lower gear to avoid engine flameout; when the vehicle accelerates and the engine speed rises up continuously to the maximum speed allowable by the gear, the transmission will automatically upshift to an adjacent higher gear to protect the engine if there is no upshift request.

  Push the knob to left to exit manual mode.

- Gear Shift Indications*

  For fuel economy considerations, in manual mode, when the system determines that a gear change is necessary, the combination instrument panel will display an upshift or downshift arrow, reminding the driver to upshift or downshift when conditions permit.

IMPORTANT
Do not rely solely on the indicated upshifting/downshifting suggestions, as actual driving situations may require different gear shifting operations than indicated. To avoid the danger of accidents, the driver must correctly assess the road and traffic conditions before shifting gears.

Note: The gearshift operation shall be made on the premise that your own safety is guaranteed and the traffic laws are observed.

Kick-down

The drive wheels may skid when kick-down is activated on road surfaces with low adhesion, this may lead to the vehicle sliding out of control.

With D or S gear selected, depressing the accelerator pedal all the way down in one motion (also known as Kick-down) will provide better acceleration performance during overtaking. At certain speeds, it will allow the transmission to shift to a lower gear immediately and provide fast acceleration. Once the accelerator pedal is released, it will resume a suitable higher gear (based on the vehicle speed and the position of the accelerator pedal).

Protection Mode

When parking the vehicle, please ensure the vehicle is parked safely and that all traffic by-laws are observed.

Automatic Transmission Overheat Protection

Starting off frequently at high ambient temperatures or transmission overload may cause high transmission temperatures. To prevent transmission damage, the system will perform the overheat protection function and the instrument pack interface will display the corresponding warning message.

With the transmission overheating, the instrument pack interface will indicate 'Please Speed Up or Stop Safely', at the moment, please speed up to above 12 mph (20 km/h) or park safely and shift to P gear to cool down the transmission as the conditions permit.

When the transmission is severely overheated, the instrument pack interface will display 'Please Stop Safely', therefore, please stop as soon as safety permits and shift to the P gear to cool down the transmission.

After parking safely, the instrument pack interface will indicate 'Please Wait'. Only when the transmission temperature has reduced and the instrument pack interface displays 'Ready for Driving' can the vehicle start off.

If the driver operates as per the above messages for 20 minutes and the warning message in the above instrument pack interface is still not altered or disappeared, please seek an MG Authorised Repairer urgently or the transmission may be severely damaged.

Limp Mode

When some failures occur, the transmission will enter Limp Mode and will only function in some gears, in some cases it may fail to reverse, during this time the instrument pack interface will display the engine emission malfunction indicator lamp. If this occurs, please contact an MG Authorised Repairer immediately.

Transmission Fault

When the transmission detects a serious functional fault, the engine emission malfunction indicator lamp will illuminate and the instrument pack interface displays ' EP '. In this case, the system will forcibly cut off the power transmission from the engine to the clutch in order to protect the transmission and the vehicle will not be able to be driven! If this occurs, please contact an MG Authorised Repairer immediately.

Gear Shift System Failure

When some serious functional failures occur in the gear shift system, the P gear indicator will flash and the vehicle will not be able to make the gear shift. As a protection feature and for driving safety, the power system will forcibly cut off the power transmission when the vehicle speed falls below a certain value and the vehicle will not be able to be driven! In some cases, the vehicle will not be able to be put into P gear. Please stop the vehicle at a safe zone when the conditions permit and apply the EPB.

If the above situation occurs, please seek an MG Authorised Repairer immediately.

Manual Transmission*

Gear Shift Lever

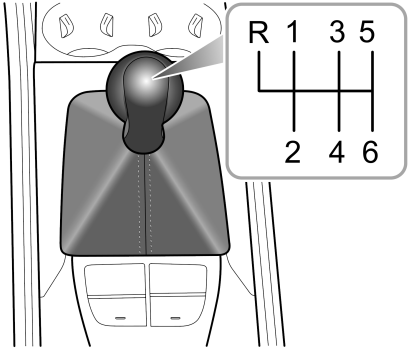

The manual transmission is a 6-speed transmission with 7 gears, which are: 1st , 2nd , 3rd , 4th , 5th , 6th and R (Reverse) respectively. All gears have synchromesh.

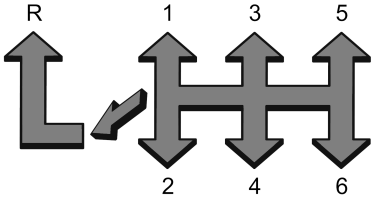

1 When switching between D gear and R gear, you must ensure that the vehicle is completely stationery, wait for a moment and then fully press the clutch pedal, push the shift lever into N position, press the lever down and push it leftward, then push it forward into the R position, slowly release the clutch pedal to complete the gear shift.

2 Do not rest your hand on the gear shift lever while driving - pressure from your hand may cause premature wear to the gear selector mechanism.

3 Do not rest your foot on the clutch pedal when driving - excessive wear to the clutch will result.

4 Do not hold the car stationary on a hill by engaging a gear. This will wear out the clutch.

Gearshift Suggestions

Gear	Recommended shift range (mph)	Engine speed (RPM)
1-2	9 ~ 15	2200 ~ 3000
2-3	22 ~ 28	2200 ~ 3000
3-4	31 ~ 37	2200 ~ 2500
4-5	40 ~ 46	2200 ~ 2500
5-6	50 ~ 56	2200 ~ 2500

Note: In order to guarantee the smooth driving and good fuel economy of the vehicle, please shift at an appropriate time and never allow the tachometer pointer to remain in the red sector for prolonged periods, otherwise the engine may be damaged.

Gear Shift Indications

For fuel economy considerations, when the system determines that a gear change is necessary and the clutch pedal is fully released, the combination instrument panel will display the recommended gear and the up or down arrow, reminding the driver to switch to the displayed gear if conditions permit.

IMPORTANT
Do not rely solely on the indicated upshifting/downshifting suggestions, as actual driving situations may require different gear shifting operations than indicated. To avoid the danger of accidents, the driver must correctly assess the road and traffic conditions before shifting gears.

Note: The gearshift operation shall be made on the premise that your own safety is guaranteed and the traffic laws are observed.

Electric Drive Unit*

Instructions for Use

The following information is very important; please read carefully before use:

- The electric drive unit is a high voltage unit; DO NOT touch it without authorisation.
- Before starting the vehicle, shift into P or N gear and ensure that the brake pedal is depressed and EPB is applied.
- After starting the vehicle, with the brake and EPB still applied, shift into the desired gear.
- Turn off the EPB, keep the brake pedal depressed until you are ready to manoeuvre the vehicle. On a flat road, once the brake pedal is released, the vehicle will automatically start to travel at a slow speed with the accelerator pedal not depressed.

Gear Shift

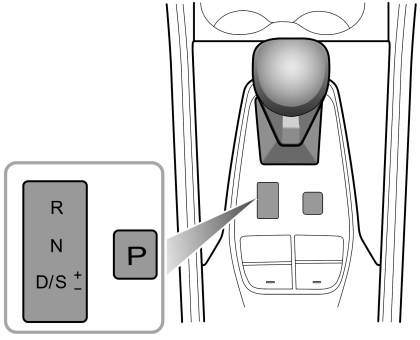

The electronic shift knob resides in the centre steady state position, with two non-steady state positions forward or backward, i.e., the electronic shift knob returns to the centre steady state position once released.

Note: When moving out of the P gear or entering the R gear, the brake pedal must be applied.

Gear Information

Coasting in N gear is forbidden when the vehicle is running.

During driving, do not move the shift lever from D to R or P position, otherwise the severe damage to electric drive unit or dangerous accident may occur.

- P : Park

  When the shift lever is in this position, the transmission will be mechanically locked. Use this gear when the vehicle is stationary.

  Press the P button and the vehicle will shift into Park gear.

  Note: Turn off the Start switch and the vehicle will automatically shift into P gear.

  Note: With the brake pedal released, the driver seat belt unfastened and the driver's door open, the vehicle will shift to P gear automatically.

- R : Reverse

  Select this gear only when the vehicle is stationary and the driver has the intention to drive backwards.

  Depress the brake pedal and push the shift knob forward to the end and the vehicle goes into reverse gear.

- N : Neutral

  Select this gear when the vehicle is stationary and the power system is running for a long time (for example, waiting for traffic lights).

  With the vehicle in P gear, depress the brake pedal, push the knob backward to the first non-steady state position and the vehicle will shift into Neutral gear.

  With the vehicle in D gear, push the knob forward to the first non-steady state position and the vehicle will shift into Neutral gear.

  With the vehicle in R gear, push the knob backward to the first non-steady state position and the vehicle will shift into Neutral gear.

- D : Drive

  This is used for normal driving and will allow automatic selection of Drive gear depending on vehicle speed and accelerator pedal position.

  With the vehicle in P gear, depress the brake pedal, push the shift knob backward to the end and the vehicle will shift into Drive gear.

With the vehicle in R/N gear, depress the brake pedal, push the shift knob backward to the end and the vehicle will shift into Drive gear.

Kick-down



The drive wheels may skid when kick-down is activated on road surfaces with low adhesion, this may lead to the vehicle sliding out of control.

With D gear selected, pressing the accelerator pedal all the way down in one motion (also known as Kick-down) will provide better acceleration performance during overtaking. At certain speeds, it will allow the transmission to shift to a lower gear immediately and provide fast acceleration. Once the accelerator pedal is released, it will resume a suitable higher gear (based on the vehicle speed and the position of the accelerator pedal).

Protection Mode



When parking the vehicle, please ensure the vehicle is parked safely and that all traffic by-laws are observed.

Electric Drive Unit Overheat Protection

The electric drive unit may become very hot in a high-temperature environment with frequent starting, frequent rapid acceleration and deceleration, long-term continuous steep climbing and overload of the electric drive unit. In order to avoid damage to the motor, the system will activate the overheat protection function.

When the system detects that the electric drive unit is overheated, the warning indicator on the instrument interface will illuminate.

In this case, park your car in a safe place or keep a low load and continue to drive your car at a constant speed to cool the motor. Only when the motor temperature is reduced and the warning indicator extinguishes can the vehicle be started off or be shifted to other gear for driving.

If the above-mentioned warning indicator does not go out after the electric drive unit has cooled down for a long

time (about 20 minutes), please stop the vehicle in a safe place and contact an MG Authorised Repairer for service as soon as possible, otherwise it may seriously damage the electric drive unit.

IMPORTANT
When the motor of the electric drive unit system is under overheat protection, in order to avoid damage to the motor, the power of the power system will be limited (the instrument pack interface will show 'Power Limited, Speed Limited' and the warning indicator will illuminate). After decelerating, this will disappear when the motor temperature returns to normal.

Electric Drive Unit Motor Failure

When the system detects any failure in the electric drive unit motor or the power electronic box, the warning indicator on the instrument interface will illuminate. If this occurs, please contact an MG Authorised Repairer immediately for service.

Limp Home Mode

When there are some failures in the electric drive unit, the electric drive unit will enter the limp home mode. In this case, the electric drive unit can only work at certain gears, the red warning indicator on the instrument interface illuminates and the instrument interface displays the warning message 'System Failure' simultaneously. After a few seconds, the warning message disappears and the warning indicator remains on. If this occurs, please contact an MG Authorised Repairer immediately for service.

Severe Functional Failures

When some serious functional failures occur in the electric drive unit, the red warning indicator on the instrument interface illuminates and the instrument interface displays the warning message 'System Failure' simultaneously. After a few seconds, the warning message disappears and the warning indicator remains on. To protect the electric drive unit, the hybrid power system will forcibly cut off the power transmission in this case and the vehicle will not be able to drive! If this occurs,

please contact an MG Authorised Repairer immediately for service.

When some serious functional failures occur in the gear shift system, the instrument interface will display ' EP '. At this time, to guarantee the driving safety, the hybrid power system will forcibly cut off the power transmission when the vehicle speed is lower than certain value and the vehicle will not be able to drive! If this occurs, please contact an MG Authorised Repairer immediately for service.

Unable to Start the Engine

When the engine is needed, the system will try to get it started. If it fails to start the engine, the yellow warning indicator on the instrument interface will illuminate. Due to the starting failure of the engine, the vehicle can only be driven under pure electric mode in this case, pay attention to the power of the high-voltage battery! If this occurs, please contact an MG Authorised Repairer immediately for service. The instrument pack interface will show the warning message 'Engine Unavailable Currently, Please Pay Attention to the Battery Power'.

Driving Mode*

Switching the driving mode when the vehicle is in motion can divert driver's attention from road conditions, this operation can only be performed when safety permits.

By selecting the driving mode, the vehicle can enable different tuning modes for power response.

The driver can choose three driving modes through the setting interface of the entertainment display: ECO Mode/Comfort Mode, Normal Mode and Sport Mode.

For certain vehicle models , the Driver can customize their driving mode settings.

ECO Mode*

The vehicle is in a low energy consumption state for energy-saving drivinge.

Comfort Mode*

For comfortable driving. In this mode, use electric energy to drive the vehicle as much as possible.

In this mode, the energy regeneration automatically enters the 'Low' mode and you can still manually adjust the mode.

Normal Mode

The vehicle is in balanced tuning state for daily driving.

Sport Mode

Provide the driver with dynamic driving experience, suitable for sporty driving style. In this mode, the control system allows the vehicle to provide more power and improve the driving performance. In Sport Mode, the vehicle consumers the most energy.

It is recommended to choose Sport Mode when driving in special road conditions such as mountain roads and plateaus.

Kinetic Energy Recovery Mode*

The reduction in vehicle speed caused by energy regeneration cannot replace the braking required for safety. PLEASE ALWAYS be prepared for braking to ensure driving safety.

When the vehicle is in braking or coasting state, the energy recovery function will be activated and the motor will convert part of the kinetic energy of the vehicle into electric energy, which is then stored in the high voltage battery.

The energy cannot be recovered or limited in the following conditions:

- N gear is selected;
- During special working conditions (gear shifting, tyre skidding, etc.);
- High-voltage battery is fully charged;
- High-voltage battery temperature is too high or too low.

The energy recovery settings have the following several modes:

'High' Mode

In 'High' mode: more energy recovered, shorter coasting distance and strong vehicle drag feel.

'Low' Mode

In 'Low' mode: less energy recovered, longer coasting distance and no significant vehicle drag feel.

Power Source Setting*

The vehicle provides the power source setting function. You can select two power source modes through the entertainment display: EV Mode and HEV Mode.

EV Mode

In the 'EV Mode', the vehicle will be driven by the motor preferentially and the instrument pack interface will show ' EV '.

Note: In this mode, the vehicle can still start the engine in due time according to the actual working conditions and the instrument pack interface shows ' HEV ' at this time.

Intelligent Hybrid

In the 'HEV Mode', the vehicle starts the engine in due time to drive the vehicle according to the actual working conditions. The instrument pack interface shows ' HEV '.

Electronic Parking Brake (EPB)

Parking Brake System - Electronic Parking Brake (EPB)

In the event of EPB malfunction where EPB release is not possible, please consult an MG Authorised Repairer in order to carry out an emergency manual release of the parking brake.

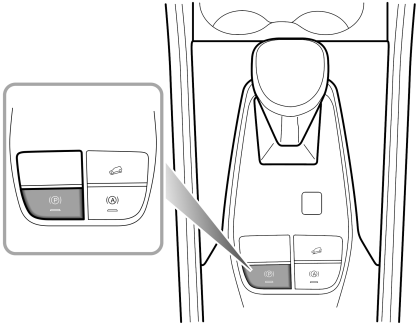

Pull up the EPB switch to turn on the EPB system after the vehicle is parked safely. Place the Start Switch in ON/RUNNING/READY position, depress the brake pedal, and press the EPB switch to turn off the EPB system.

If the indicator in the EPB switch and the red indicator Ⓟ on the instrument pack illuminates, it indicates that the EPB system has been turned on. If the indicator in the EPB switch and the indicator Ⓟ on the instrument pack turn off, the EPB system has been switched off.

Note: Always turn on the EPB system every time you leave the vehicle.

Note: An audible motor noise may be heard when turning on or off the EPB system.

IMPORTANT
In the event of a flat battery or power failure, it is not possible to apply or release the EPB. In such a case, 'booster cables' shall be used for emergency start of the power system. Please refer to 'Jump Start' in 'Emergency Information' chapter.

Starting Aid

If the driver's seatbelt has been fastened and the accelerator pedal has been pressed to maneuver, the EPB system will automatically turn off.

Emergency Braking Function



Inappropriate use of the EPB can lead to accidents and injuries. Do not apply the EPB when the vehicle is in motion, unless it is an emergency.



When the vehicle is decelerating with the use of the EPB, DO NOT switch off the start switch as this could result in a serious injury.

In the event of normal brake failure during driving, emergency braking can be initiated by pulling the EPB switch upward and holding. An audible warning will sound during emergency braking. The braking process will be cancelled by releasing the EPB switch.

EPB Switch Failure Mode

When the EPB switch fails, the EPB malfunction indicator lamp on the vehicle instrument pack illuminates and the electronic parking function cannot be enabled normally when operating the EPB switch at this time. You should drive your vehicle to an MG Authorised Repairer for repair immediately.

If your vehicle should be parked with the EPB fault present, please drive to a flat ground and operate the start switch to turn off the power system (keep the instrument pack powered on and illuminated). The brake system will automatically perform the electronic parking emergency function to ensure that the vehicle is parked safely.

IMPORTANT
Do not park on a slope to prevent the vehicle from rolling when an EPB fault is present.

After the electronic parking emergency function is enabled, fasten your seat belt, start the power system, shift into Drive or Reverse gear, release the clutch pedal (if equipped) and depress the accelerator pedal. The electronic parking

emergency function will automatically be deactivated and the vehicle can be driven.

Service Brake

Vacuum Assisted Hydraulic Brake System*

The vacuum assisted hydraulic brake system allows the driver to apply the brake more easily and also improves the braking performance.

Note: When the engine is not started, the brake pedal will feel hard, but when the engine is started, the brake pedal will feel soft, which is the brake booster in action.

The vacuum assisted hydraulic brake system helps the driver reduce the amount of effort when depressing the brake pedal, ensuring safe and efficient braking. However, when daily driving, the following non-standard operations should be avoided:

- Never allow the car to coast with the engine flameout. Since the vacuum assisted hydraulic brake system functions only when the engine is running, braking when the car is coasting with the engine flameout may cause braking failure.
- In case of flameout while driving, you should depress the brake pedal to stop the vehicle as quickly as traffic safety permits. During braking, DO NOT pump the brake pedal, because it will excessively consume the vacuum boost in the braking system, thereby requiring increased pressing force and reducing the easiness in braking.

When driving, the following matters should be noted:

- When the braking efficiency of the vacuum booster decreases due to the change of atmospheric pressure from plain to plateau regions, the user needs to depress the brake pedal with greater effort than usual to gain effective braking.
- When driving through puddles or heavy rain, a water film may form on the surface of brake disc, which easily reduces the braking efficiency and extends braking distance. In this case, keep a safe distance from other vehicles and intermittently apply the brake pedal to keep the brake disc surface dry.
- If the braking efficiency decreases due to vehicle failure, please contact an MG Authorised Repairer for service as soon as possible.

Integrated Braking System (IBS)*

The integrated braking system (IBS) features high degree of integration, faster braking response and higher stability due to independence of vacuum environment. Pay attention to the followings when using the IBS::

- The IBS only functions with the power system in READY mode. NEVER allow the vehicle to freewheel with the power system turned off.
- If the power system is turned off while driving, you should firmly press the brake pedal and stop the vehicle as soon as safety permits.
- If the IBS performance degrades due to a low battery or other reasons, you need to apply more force than usual to the brake pedal to brake effectively.

Multi-Collision Brake System (MCB)*

The MCB function will automatically apply the brakes to reduce the vehicle speed and improve the vehicle stability after a collision. It is designed to reduce the risk of a secondary collision caused by the uncontrolled movement of the vehicle after a collision.

The MCB will be activated when the following conditions are all met at the same time:

- A vehicle collision where airbags are deployed;
- The vehicle speed is less than 37 mph (60 km/h);
- The steering wheel has not been turned in excess of 180° ;
- SCS is fault free.

If the driver presses the accelerator pedal firmly after the MCB function is triggered, the system will exit the braking state.

Note: The MCB function cannot decelerate the vehicle in all cases of collision due to the fact that the collision process may cause some parts to malfunction or fail and affect the normal operation of the function.

Seat Belt 170

Airbags 182

Child Restraints For UK Region 191

Child Restraints for Other Region Except UK 202

Child Proof Locks 212

Body Stability Control System 213

Antilock Brake System (ABS) 214

Auxiliary Brake System (EBA) 215

Electronic Brake Force Distribution (EBD) 216

Auto Hold 217

Hill Hold Control (HHC) 219

Hill Descent Control (HDC) 220

Active Rollover Protection (ARP) 223

Emergency Braking Hazard Warning Strobe (HAZ) 224

*Pedestrian Alert Control System** 225

Tyre Pressure Monitoring System (TPMS) 226

Seat Belt

It is important that all seat belts are worn correctly. Always check that all passengers are wearing seat belts. DO NOT carry passengers that are unable to wear correctly positioned seat belts. Wearing seat belts incorrectly may cause serious injury or even death in the event of a collision.

Seat belts cannot function correctly when the seats are reclined excessively. DO NOT drive when the seats are excessively reclined.

NEVER unfasten a seat belt whilst driving, serious injury or death may occur in the event of an accident or emergency braking.

Never fasten the driver seat belt or use a buckle replacement when the driver seat is vacant or when exiting the vehicle.



This vehicle is equipped with a seat belt warning lamp to remind you to fasten your seat belt. Refer to 'Warning Lamps and Indicators' in 'Instruments and Controls' section for details.

When the vehicle is moving, seat belts must be fastened for all occupants because:

- You can never predict if you will be involved in a collision accident and how serious it may be.
- The experience has clearly demonstrated that whether the occupant is effectively protected has a lot to do with whether the seat belt is properly worn or not in many collision accidents! In the event of a collision or emergency braking, the seat belts will be automatically tightened. When the seat belt is worn correctly, the strongest bone in your body will bear the impact force to reduce your speed together with the vehicle, so as to prevent the out-of-control movement which may cause serious injury to driver and occupants.

Therefore, all occupants must wear seat belts correctly, even during short-distance journeys.

Protection Provided by Seat Belts

Note: It is of equal importance for passengers in the rear seats to fasten their seat belts correctly. Otherwise, passengers with seat belts not correctly fastened will be thrown forward in the event of an accident and will endanger themselves as well as the driver and other passengers. NEVER fasten the driver seat belt or use a buckle replacement when the driver seat is vacant or when exiting the vehicle.

When the vehicle is in motion, the moving speed of the occupants is identical to the running speed of the vehicle. In the event of frontal collision accident or emergency brake, the occupants not having the seat belt fastened properly will continue moving forward at the speed before the collision due to inertia instead of stopping immediately until they come into contact with a stationary object. These objects may be the steering wheel, instrument panel, windscreen or any object in the vehicle in the way of forward movement.

For the occupants having the seat belt fastened properly, they will slow down together with the vehicle because of the automatic locking function of the seat belt, so as to prevent the out-of-control movement which may cause serious injury to the driver and occupants. Under the protection of seat belt, you will have longer distance and more time to stop moving and the strongest bone in your body will bear the impact force. That is why it is important to fasten the seat belt correctly.

When minor traffic accident occurs, trying to shore up your body with arms is very dangerous. Even the low speed collision will generate force that arms and hands can not support, therefore, seat belts must be worn correctly during driving.



How to Wear Seat Belts Properly



Incorrectly worn seat belts could cause injury or death in the event of an accident. Seat belts are designed for one person, DO NOT share seat belts.



DO NOT wrap a seat belt around when holding a baby or child in your arms.



Remove any heavy coats or clothing when wearing a seat belt, failure to do so can affect protection provided by the seat belt.



Seat belts should not be wrapped around hard or sharp objects such as pens, spectacles or keys.



Seat belts can not function correctly when the seats are reclined excessively. DO NOT drive when the seats are excessively reclined.

The seat belts fitted to your vehicle are designed for use by normal sized adults. This part of the literature refers to adult use. For advice on seat belt use with children, please see 'How Seat Belts should be worn on children'.

In order to maintain effective protection, the occupants must sit in the correct orientation, placing feet on the floor in front of them, with an upright body (no excessive recline) and the seat belt correctly fastened.

Lap-shoulder Belts

All seat belts fitted on this vehicle are lap-shoulder belts, which shall be used properly as follows.

1 Hold the metal tab, pull the seat belt out steadily over the shoulder and across your chest. Ensure there is no twist on the belt.

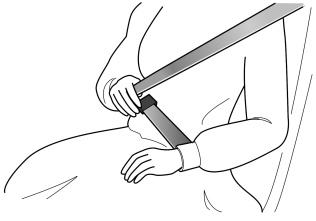

2 Insert the metal tab into the buckle until you hear a 'click', this indicates the seat belt is securely locked.

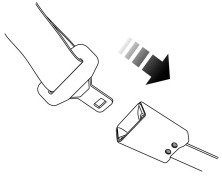

3 Pull the shoulder belt upward and tighten up the lap belt.

4 To release the seat belt, press the red button on the buckle and the metal tab of the seat belt will automatically pop out. When the seat belt is unfastened, it will retract automatically to its original position.

Correct Routing of the Seat Belts

Ensure the seat belt is correctly positioned on the body, NEVER cross the neck or abdomen, NEVER pass the seat belt behind the back or under the arms.

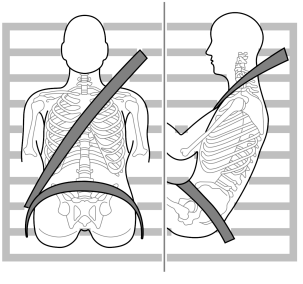

When wearing seat belts, the lap belt section should be positioned as low as possible across your hips (Never cross the abdomen), so that in a collision accident, the lap belt can apply force to the firm hips, reduce the possibility of body moving under the lap belt and maximize the protection for occupants against injury. This is because if the accident occurs, the body moves under the lap belt, causing the lap belt to apply force on abdomen, which may cause serious or fatal injuries. The shoulder belt should cross the middle of the shoulder and the chest. Never cross your neck, arms or cross under your arms or behind your back. In the event of an emergency braking or collision, the shoulder belt will be tightened.

To ensure that the seat belts always provide maximum protection, ensure the belt is flat, not loose and contacts the body. Adjust seat belt to ensure it is not loose.

Seat Belt Upper Anchor Point Height Adjustment

During driving, DO Not adjust the height of seat belt.

Make sure the seat belt upper anchor point has been adjusted to proper height and locked in place or injury even death may be caused in the event of a collision/accident.

The front seat belts are equipped with an upper anchor point height adjuster, so that the shoulder belt passes through the middle of the shoulder (away from the face and neck, but does not slide below the shoulder). Incorrect positioning will reduce the efficiency of the seat belt in the event of a collision or emergency braking.

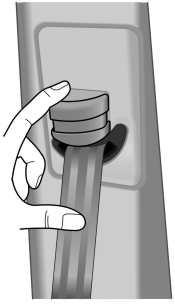

Please follow the instructions below to use the seat belt upper anchor point height adjuster correctly:

1 Hold the seat belt.

2 Press the release button and move the height adjuster to desired position.

3 After moving the adjuster to the required position, try to move the adjuster down with the release button released to make sure it is locked in place.

Seat Belt Use during Pregnancy

During the pregnancy, please wear the lap - shoulder belt correctly. The shoulder belt should pass across the chest as normal. The lap belt should pass below the belly, low and snug on the hip bones. NEVER position the belt on or above the belly. Wearing correctly positioned seat belts will provide protection for both mother and unborn child in the event of a collision or emergency braking.



Please consult your physician for further details.

Seat Belt Use for Disabilities

It is a legal requirement that all occupants wear seat belts, this include people with disabilities.

Please consult your physician for further details.

How Seat Belts should be worn on children



Only recommended child restraints suitable for the age, height and weight of the child should be used.

For safety reasons, children must ride in a child restraint device fixed to the rear seat.

Infants

Only recommended child restraints suitable for the age, height and weight of the child should be used.

NEVER carry a child or infant with your arms when driving. When collision accidents occur, the weight of the child will produce so great of a force that you will not be able to hold on to the child. The child will be thrown forward and suffer serious injury or even death.

Seat belts for adults are not suitable for young children, because seat belts can not lock their hips tightly. If a collision or accident occurs, they will suffer from serious injury or even death. Therefore, they shall be given special protection.

Infants must use a child restraint device. You shall choose the proper restraint device suitable for your vehicle and child and install and use it in accordance with the instructions from the manufacturer. Please refer to 'Child Restraints' in this section for more details.

Elder Children

NEVER share a seat belt amongst children. In the event of an accident or collision, the children are not secure. It could cause death or serious injury.

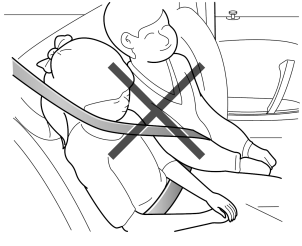

When children are beyond the age of using a child restraint device, they must sit properly and use lap - shoulder belts equipped on the vehicle. Children are safer if they sit on the rear seat and wear seat belts correctly.

Check seat belts for proper position in time. Adjust the height of seat belts to keep the shoulder belt away from the child's face and neck. The lap belt should cross the hips

as low as possible, just touch the thigh and be tightened properly. In this way, seat belts can pass the applied force to the strongest part of the child's body in the event of an accident.

If the shoulder belt is too close to the child's face or neck, please buy and use a child boost cushion that meets relevant law or standard. Children boost cushion can boost children to the height where the shoulder belt cross just the middle of the shoulder and lower the lap belt to hips.

Seat Belt Pre-tensioners



The seat belt pre-tensioners will only be activated once and then MUST BE REPLACED. Failure to replace the pre-tensioners will reduce the efficiency of the vehicle's restraint system.



If the pre-tensioners have been activated, the seat belts will still function as restraints and must be worn in the event that the vehicle remains in a drivable condition. The seatbelt pre-tensioners should be replaced at the earliest opportunity by an MG Authorised Repairer.

The vehicle is fitted with seat belt pre-tensioners beside some seat belt retractors. When medium or severe frontal collision occurs and meets the condition to activate the pre-tensioner, it will help to secure the seat belt to reduce the forward motion of the occupant body.

The airbag warning lamp on the instrument pack will alert the driver to any malfunction of the seat belt pre-tensioners (see 'Warning Lamps and Indicators' in the 'Instruments and Controls' chapter).

The seat belt pre-tensioners can only be activated once. After activation in a collision, they must be replaced. This may also involve replacement of other SRS components. Please refer to 'Replacement of SRS Components' in 'Airbags' of this section.

IMPORTANT
• Seat belt pre-tensioners will not be activated by minor impacts. • The removal or replacement of a pre-tensioner must be carried out by the technicians trained by the manufacturer. • 10 years from the initial date of registration (or installation date of a replacement seat belt pre tensioner), some components will need to be replaced. The appropriate page of the Service Records must be signed and stamped once the work has been completed.

Seat Belt Checks, Maintenance and Replacement

Seat Belt Checks

Split, worn or frayed seat belts may not function correctly in the event of a collision, if there are any signs of damage, replace the belt immediately.

Always ensure the red release button on the seat belt buckle is pointing upwards ensure easy release in the event of an emergency.

Please follow the instructions below to check the seat belt warning lamp, seat belt, metal tab, buckle, retractor and fixing device regularly:

- Insert the seat belt metal tab into the corresponding buckle and pull seat belt webbing close to the buckle quickly to check that the belt clasp locks.
- Hold the metal tab and pull the seat belt forward quickly to check that the seat belt reel locks automatically, preventing the webbing from extending.
- Fully extract the seat belt and visibly examine for twists, fraying, splits or worn areas.
- Retract the seat belt and allow it to return slowly to ensure continual and smoothly complete operation.
- Visibly examine the seat belt for loose or damaged components that may affect its normal operation.
- Ensure the seat belt warning lamp is fully functional.

If the seat belt fails to pass any one of above checks, please contact a Local Authorised Repairer for repair.

Seat Belt Maintenance



DO NOT attempt to remove, install, modify, disassemble or dispose of the seat belts. Have any necessary repairs carried out by an MG Authorised Repairer. Inappropriate handling may lead to incorrect operation.



Ensure no foreign or sharp objects become lodged in the seat belt mechanisms. DO NOT allow liquids to contaminate the seat belt buckle, this could affect the buckle engagement.

Seat belts should only be cleaned with warm soapy water. Do not use any solvent to clean the seat belt. Do not attempt to bleach or dye the seat belt, otherwise the strength of the seat belt will be severely weakened. After cleaning, wipe with a cloth and allow to dry. Do not allow the seat belt to fully retract before it is completely dry. Keep seat belts clean and dry.

If there are contaminants accumulated in the retractor, the retraction of seat belt will be slow. Please use a clean and dry cloth to remove any contaminants.

Seat Belt Replacement



Collision accidents may damage the seat belt system. The seat belt system may not be able to protect users after damage, which may result in serious injury or even death. After an accident, seat belts should be checked and replaced as needed immediately.

Seat belts may not require change after minor collisions. However, some other parts of the seat belt system, like metal tab, buckle, retractor, etc, may be deformed or damaged in the collision. Please go to an MG Authorised Repairer for repair or replacement of seat belt assembly.

Airbags

Overview

The airbag SRS provides ADDITIONAL protection in a severe frontal impact only. It does not replace the need or requirement to wear a seat belt.

The airbags together with the seat belts provide optimum protection for adults, but it is not the case for infants. The seat belt and airbag systems in the vehicle are not designed for protecting infants. The protection required by infants should be provided by child restraints.

In the corresponding place where airbags are fitted, there is a warning sign stating 'AIRBAG'. Generally, SRS contains the following components (the components are not completely the same according to different model and configuration):

- Two frontal airbags (fitted in the centre part of the steering wheel and the instrument panel above the glove box respectively)
- Two side airbags (fitted in the outer seatback cushion of the two front seats)
- Two side curtain airbags (fitted in the roof interior trims on both sides)
- One centre airbag (fitted in the inner seatback cushion of the driver seat)

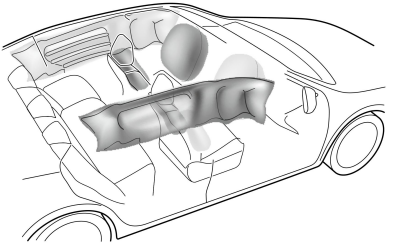

Airbag Warning Lamp



This vehicle is equipped with an airbag warning lamp to remind you of the state of the safety system. Refer to 'Warning Lamps and Indicators' in 'Instruments and Controls' section for details.

Airbag Deployment

Front seat passengers should not place feet, knees or any other part of the body in contact with or in close proximity to a front airbag.

To minimise the risk of accidental injury from inflating airbags, seat belts should be worn correctly at all times. In addition, both driver and front passenger should adjust their seat to provide sufficient distance from the frontal airbags, so as to avoid severe or even fatal injury when the airbag is deployed. If side airbags and side head impact protection airbags are fitted, both driver and front seat passenger should be seated to maintain sufficient distance from the upper part of the body to the sides of the vehicle, this will ensure maximum protection when the side airbags/side head impact protection airbags are deployed.

An inflating airbag can cause facial abrasions and other injuries if the occupant is too close to the airbag at the time of its deployment.

When airbags are deployed, children without proper protection may suffer from serious injury or even death. DO NOT carry children in the arms or on the knees during traveling. Children should wear seat belts suitable to age. DO NOT lean out of windows.

After deployment, the relative airbag components will become very hot, such as the steering wheel, instrument panel and both sides of the roof rails . DO NOT touch any airbag related components after airbag deployment, it may cause burns or serious injury.

DO NOT knock or strike the position where any airbag related parts are located, so as to avoid accidental airbag deployment which may cause serious injury or even death.

DO NOT affix or place any objects on or adjacent to the airbags. This may affect the airbag passage or create projectiles that may cause injury or serious harm in the event of airbag deployment

In the event of a collision, the airbag control unit monitors the rate of deceleration or acceleration induced by the collision, to determine whether the airbags should be deployed. Airbag deployment is virtually instantaneous and occurs with considerable force, accompanied by a loud noise.

In the event of a severe frontal collision, a completely deployed airbag, along with a correctly worn seat belt, can limit the movement of the driver and front passenger, reducing the risk of head and chest injuries. For vehicles fitted with side airbags and side curtain airbags, when the vehicle encounters a serious side collision, the completely

deployed airbag will form a cushion of air between the occupant and the vehicle side to reduce the risk of body side injuries.

When you sit upright in the seat and against the backrest, seat belts and airbags can provide the most effective protection. When encountering a serious collision, airbags will deploy drastically. At this moment, if you or other passengers do not use seat belts properly and lean forward, recline or sit in other incorrect postures, you or other passengers are likely to suffer from serious injury or fatal injury.

IMPORTANT

- Airbags cannot protect lower body parts of passengers.
- Airbags are not designed for rear collision, minor frontal collision or if the vehicle rolls over, nor will it operate as a result of heavy braking.
- Deployment and deflation of the airbags takes place very quickly and will not protect against the effects of a secondary impact if it occurs.
- When an airbag inflates, a fine powder is released. This is not an indication of a malfunction. However, the powder may cause irritation to the skin and should be thoroughly flushed from the eyes and any cuts or abrasions of the skin. If your skin, eyes, nose or throat etc feels uncomfortable, please consult a doctor.
- After inflation, front and side airbags deflate immediately. This provides a gradual cushioning effect for the occupant and also ensures that the driver's forward vision is not obscured.

Frontal Airbags



NEVER use a rearward facing child restraint on a seat protected by an ACTIVE AIRBAG in front of it, DEATH or SERIOUS INJURY to the CHILD can occur. Refer to 'Disabling the Passenger Airbag'.



Front seat passengers should not place feet, knees or any other part of the body in contact with or in close proximity to a front airbag.



In extreme cases driving on very uneven surfaces may cause airbag deployment. Please take extra care when driving on uneven roads.

Frontal airbags are designed to deploy during serious frontal impacts or similar impacts. Conditions described below or similar ones may cause airbag deployment.

- A frontal collision with unmovable or non deformable solid objects at a high speed.
- The vehicle chassis is seriously damaged. Conditions that can cause serious chassis damage, such as: a collision with kerbstones, road edges or hard surface; falling into deep ravines or holes; or hitting the ground violently after jumping up.

Side Airbags, Centre Airbag and Side Curtain Airbags

The structure and material of the seat is critical to the correct operation of side airbags. Therefore, please DO NOT fit seat covers which may affect side airbag deployment.

In the event of a serious side impact, the front side airbag on the impacted side will deploy quickly from the outer seat backrest cover, the side curtain airbag will deploy quickly from the roof interior trim and the centre airbag will deploy quickly from the inner backrest cover of the driver seat. The other side will not deploy. Conditions described below or similar ones may cause side airbag, centre airbag and side curtain airbag deployment.

- One side of the vehicle collides with high-speed ordinary passenger car.

Conditions in Which Airbags Will Not Deploy

The deployment of airbags does not depend on the vehicle speed, but on the object that the vehicle hits, angle of impact and the rate at which the car changes speed as a result of a collision. When the impact force of collision is absorbed or dispersed to vehicle body, airbags may not deploy; however, airbags may sometimes deploy according to impact condition. Therefore, the deployment of airbags shall not be judged based on the severity of vehicle damage.

Frontal Airbags

Under conditions described below or similar ones, the frontal airbags may not be deployed:

- The impact point is not central to the front of the vehicle.
- Frontal collision with a solid utility pole or traffic sign post.
- Collision with the bottom part of the truck's tail; cut-in collision with trucks or vehicles with a higher chassis.
- Frontal collision at an angle with guard bars.
- Impacts to the rear or side of the vehicle.

- The vehicle rolling over.

Side Airbags, Centre Airbag and Side Curtain Airbags

Under conditions described below or similar ones, the side airbags, centre Airbag and side curtain airbags may not be deployed:

- Side impacts at certain angles.
- Side impact with a motorcycle.
- Side impact on engine compartment.
- Side impact on load space.
- The vehicle rolling over.
- Frontal collision at an angle with guard bars.
- Side collision with posts.
- Frontal collision with parking or moving vehicles.
- Impacts to the rear of the vehicle.

Front Passenger Airbag Switch*

This switch can be used to deactivate the front passenger side airbag only when a rearward-facing child restraint is installed on the front passenger side seat.

When an adult is seated in the front passenger side seat, please ensure that the front passenger side airbag is switched on.

The front passenger airbag could be activated or deactivated via entertainment display.

The enabled or disabled status of the front passenger airbag will be displayed on the entertainment display.

-  When the passenger airbag is disabled, the OFF indicator light illuminates.
-  When the passenger airbag is enabled, the ON indicator light illuminates for a period of time.

Note: All models in UK region are equipped with the Front Passenger Airbag Switch.

IMPORTANT
• If the OFF and ON indicator lights illuminate together or the light is inconsistent with the passenger airbag switch position, Please contact an MG Authorised Repairer immediately.

Service and Replacement of Airbags

Service of SRS components



DO NOT install or modify the airbag. Any changes to the vehicle structure or airbag system wiring harness are strictly prohibited.



Changes to vehicle structure is prohibited. This may affect the normal operation of the SRS.



DO NOT allow these areas to be flooded with liquid and DO NOT use petrol, detergent, furniture cream or polishes.



If water enters the vehicle, it may cause damage to the SRS. In this case, even if the collision does not occur, the airbag may be accidentally deployed. Immediately shut down the power system and disconnect the battery cable; do not try to start the power system. Seek a local Authorised Repairer for service.

If the airbag warning lamp fails to illuminate or remains on or there is any damage in the front or side of the vehicle and the cover of airbag module has any sign of damage, please go to a Local Authorised repairer to check SRS of the vehicle.

IMPORTANT
• The removal or replacement of an airbag module should be carried out by a Local Authorised Repairer. • After 10 years from the initial date of registration (or installation date of a replacement airbag), some components will need to be replaced by a Local Authorised Repairer. The appropriate page of the Service Portfolio must be signed and stamped once the work has been completed.

Replacement of SRS components



Even if the airbag does not deploy, collisions may cause damage to the SRS in the vehicle. Airbags may not function properly after damage and can not protect you and other passengers when a second collision occurs, which may cause serious injury or even death. To ensure that SRS can function properly after collision, please go to an MG Authorised Repairer to check airbags and repair as necessary.

Airbags are designed for using once only. Once the airbag is deployed, you must replace the SRS components.

Child Restraints For UK Region

Important Safety Instructions about Using Child Restraints

Children under the age of 12 years are recommended to be seated in the rear seats. Compared with adults, children's muscles and bones do not fully develop, so you need to use dedicated child restraints to protect children. Use child restraints in rear seats to protect children based on the child's age, height and weight.

It is recommended that a child restraint system that complies with UN ECE-R44 and ECE-R129 are fitted in this vehicle. When choosing a child restraint, check relevant marks or instructions about the weight range applicable for the child restraint and the usage message on it.

When installing and using a child restraint, it is necessary to comply with relevant laws and regulations, the instructions supplied by the child restraint manufacturer and the instructions on children's safety in this manual.

The correct use of child restraints will greatly reduce children's injury risk in accidents or relieve their injury severity and please pay attention to the followings when you use child restraints:

- It is recommended that children shorter than 1.5 metres (or under 12 years of age) should use the appropriate child restraint and cannot use regular seat belt, otherwise it may cause the abdomen and neck injuries.
- Never let your children ride in unprotected case. Care should not be neglected because of children sitting on the child restraint.
- Only one child may be carried in any one restraint.
- DO NOT put the child on the lap or in arms when sitting in any seat.
- Proper child restraint can provide protection for your children.
- Relevant front seat may need to be adjusted frontward for installing the rear-facing child restraint to the rear seats.
- The position of seat head restraints may need to be adjusted for installing the forward-facing child restraint to the rear seats.
- Never let your child stand or kneel on the seat during driving, otherwise, your child may be tossed and thus

lead to injury to their own and other people or even death when an accident occurs.

- If a child's body leans forward or the posture is not correct hilst the vehicle is in motion, then the accident will increase the risk of injury.
- The method of using seat belts have a great influence on the maximum protection offered by the seat belt, you must comply with the child restraint manufacturer's instructions on proper use of seat belts. If seat belts are not properly fastened, even a minor traffic accident may lead to injury.
- Child restraints that are not fitted correctly may move and injure other occupants in the event of an accident or emergency braking. Therefore, even if there is no infant or child in the child restraint, it should be fitted properly and securely in the vehicle.

Warnings and Instructions on Use of Child Restraint on Front Passenger Seat



NEVER use a rearward facing child restraint on the front passenger seat with the front passenger airbag activated, otherwise DEATH or SERIOUS INJURY to the CHILD may occur.

Use one child restraint per child.

In cases where there is a need to install a rear facing child restraint on the front passenger seat, use the entertainment display to deactivate the front passenger airbag function otherwise severe injury or even death can occur.

Once the child restraint is removed from the front passenger seat, use the entertainment display to reactivate the front passenger airbag.

When installing a child restraint on the front passenger seat, move the front passenger seat as far rearward as possible.

Please carefully read the safe driving warning label on the sun visor. Always install the child restraint in the rear seat for security reasons and the warning shall be noted in a special case when the child restraint must be used on front passenger seat.

When child restraint must be used on front passenger seat, please follow the instruction below.

IMPORTANT

- Move the front passenger seat as far back as it can be adjusted to create the largest possible distance between the child seat and the front passenger front airbag.
- Move the backrest to the upright position.
- Set the seat belt heights so that the seat belt routing follows a natural path adapted to the child seat without excessive deviations. For rear-facing child seats, use the lowest position of the belt height adjuster.
- Only use child seats that have been approved by the child seat manufacturer for use on a front passenger seat with front and side airbag.

Important Instructions on Children's Safety and Side Airbags

Children should not be allowed in areas where side airbags may be deployed, there is a risk of serious injury.

Only recommended child restraints suitable for the age, height and weight of the child should be used and firmly fixed in the vehicle.

Do not place any items in areas where side airbags may be deployed, otherwise there is a risk of serious injury.

In the event of a side collision, the side airbags can provide better protection for the passenger. However, when the airbag is triggered, a very strong expansion force is generated, if the passenger's seating position is not correct, the airbags or items in the side airbag deployment area may cause injury.

Therefore, the correct child restraint shall be used to secure the child properly in the seat and ensure the child's seating position is correct and there is enough space between the child and the side airbag deployment area for the airbag to deploy without any hindrance in a traffic accident and thus provide the best protection.

Fixing Child Restraints

Secured Using Lap and Shoulder Belts

Please DO NOT put the rearward facing child restraint on the front passenger seat with the front passenger airbag activated, this may cause serious injury or even death.

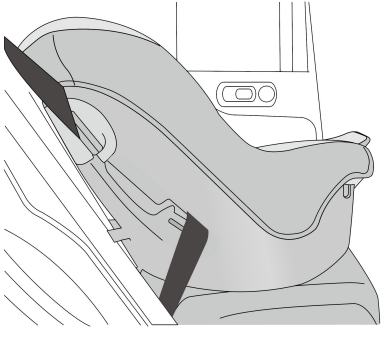

The child restraint can be secured to the rear seat by the lap and shoulder belts.

Secured with ISOFIX/i-Size Device

WARNING

The ISOFIX/i-Size anchorages in the rear seat are designed for use with ISOFIX/i-Size systems only.

WARNING

Child restraint anchorages are designed to withstand only those loads imposed by correctly fitted child restraints. Under no circumstances are they to be used for adult seat belts, harnesses or for attaching other items or equipment to the vehicle.

The 2nd-row seats of this vehicle on both sides are provided with ISOFIX/i-Size interface (as indicated by the arrow in the figure below) connected to the ISOFIX/i-Size child restraint. When installing and removing any child restraint system, always follow the manufacturer's instructions.



- Insert the tapered plastic sleeve into ISOFIX/i-Size anchor between the seat cushion and backrest.
- Push the ISOFIX/i-Size attachment of the child restraint into the tapered plastic sleeve already fitted and snag it in the ISOFIX/i-Size anchor.

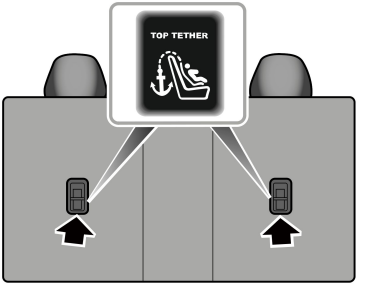

The Top-tether (as arrowed in the figure above) for auxiliary fixation of the child restraint is provided at the back of the rear seat backrest. The single top-tether of the child restraint must pass through space between the rods of the rear seat headrest and dual tether must pass from both sides of the rear seat headrest.

Note:

When using seat mounted, universally approved child restraint system, the top tether must be used.

To fasten the top tether of the child restraint system, route the tether under the rear headrest and attach it to the anchorage hook.

When fixing the top tether, be careful not to twist the top tether.

If the ISOFIX/i-Size lower anchorages are not being used, using the seatbelt, complete the installation in line with the child restraint manufacture's instruction.

- After the installation, push or shake the child restraint with moderate force to confirm it is properly secured.

Child Restraint Groups and Installation Position

Only approved child restraints suitable for children are allowed. Children taller than 1.5 m may directly use the seat belts in the vehicle. Child restraints shall comply with relevant regulations or standards, such as EU regulations ECE-R44 and ECE-R129.

Recommended Child Restraint Systems

ECE-R129 classification is based on a child height

Child Stature	Recommended
40~83cm	Maxi Cosi Pebble 360
76~105cm	Britax Römer TriFix[2]i-Size
100~150cm	Britax Kidfix i-Size[1]

Note:

[1]For the best protection, it is recommended to use this child restraint sysytem with the included backrest and be sure to attach the seatbelt through Secure Guard and XP-Pad. The side impact extensions should be used and extended to the outermost when in use.

ECE-R44 classification is based on a child weight

Weight Group	Child Weight	Recommended
Group III	22 to 36kg	Graco Booster Basic

Suitable Seats for Attaching Child Restraint Systems

Seating Position	Seating Position					
	Front Driver	Front Passenger[1]		2nd Row Left	2nd Row Centre	2nd Row Right
		With Front Passenger Airbag Activated	With Front Passenger Airbag Deactivated			
Seating position suitable for univeral belted(yes/no)	No	Yes Forward facing only	Yes	Yes	Yes	Yes
I-Size seating position(yes/no)	No	No	No	Yes	No	Yes
Seating position suitable for lateral fixture(L1/L2)	No	No	No	No	No	No

	Seating Position					
Seating Position	**Front Driver**	**Front Passenger[1]**		**2nd Row Left**	**2nd Row Centre**	**2nd Row Right**
		With Front Passenger Airbag Activated	**With Front Passenger Airbag Deactivated**			
Largest suitable rearward facing fixture (R1/R2x/R2/R3)	No	No	No	R3	No	R3
Largest suitable forward facing fixture(F1/F2x/F2/F3)	No	No	No	F3	No	F3

Seating Position	Seating Position					
	Front Driver	Front Passenger[1]		2nd Row Left	2nd Row Centre	2nd Row Right
		With Front Passenger Airbag Activated	With Front Passenger Airbag Deactivated			
Largest suitable booster fixture(B2/B3)	No	(B2/B3)[2]	(B2/B3)[2]	B2/B3	(B2/B3)[2]	B2/B3

Note:

- [1]When installing a CRS on the front passenger seat, adjust the front passenger seat as far back as possible to securely install the CRS.
- [2]Only applicable for installation with seat belt.
- During the installation of the CRS, the backrest angle of seats should be adjusted reasonably to ensure that the CRS remains stable.
- During the installation of the CRS, the height of the headrest should be adjusted reasonably or the headrest should be removed to avoid interference with the CRS. Do not remove the head restraint when using a booster cushion with no backrest. Ensureall removed head restraints are stowed safely. Refit the head restraint once the CRS has been removed.

Child Restraints for Other Region Except UK

Important Safety Instructions about Using Child Restraints

Children under the age of 12 years are recommended to be seated in the rear seats. Compared with adults, children's muscles and bones do not fully develop, so you need to use dedicated child restraints to protect children. Use child restraints in rear seats to protect children based on the child's age, height and weight.

It is recommended that a child restraint system that complies with UN ECE-R44 and ECE-R129 are fitted in this vehicle. When choosing a child restraint, check relevant marks or instructions about the weight range applicable for the child restraint and the usage message on it.

When installing and using a child restraint, it is necessary to comply with relevant laws and regulations, the instructions supplied by the child restraint manufacturer and the instructions on children's safety in this manual.

The correct use of child restraints will greatly reduce children's injury risk in accidents or relieve their injury severity and please pay attention to the followings when you use child restraints:

- It is recommended that children shorter than 1.5 metres (or under 12 years of age) should use the appropriate child restraint and cannot use regular seat belt, otherwise it may cause abdomen and neck injuries.
- Never let your children ride in unprotected case. Care should not be neglected because of children sitting on the child restraint.
- Only one child may be carried in any one restraint.
- DO NOT put the child on the lap or in arms when sitting in any seat.
- Proper child restraint can provide protection for your children.
- Relevant front seat may need to be adjusted frontward for installing the rear-facing child restraint to the rear seats.
- The position of seat head restraints may need to be adjusted for installing the forward-facing child restraint to the rear seats.
- Never let your child stand or kneel on the seat when the vehicle is in motion, otherwise, your child may be

tossed and thus lead to injury to their own and other people or even death when an accident occurs.

- If a child's body leans forward or the posture is not correct during driving, then the accident will increase the risk of injury.
- The method of using seat belts have a great influence on the maximum protection offered by the seat belt, you must comply with the child restraint manufacturer's instructions on proper use of seat belts. If seat belts are not properly fastened, even a minor traffic accident may lead to injury.
- Child restraints that are not fitted correctly may move and injure other occupants in the event of an accident or emergency braking. Therefore, even if there is no infant or child in the child restraint, it should be fitted properly and securely in the vehicle.

Warnings and Instructions on Use of Child Restraint on Front Passenger Seat



NEVER use a rearward facing child restraint on the front passenger seat with the front passenger airbag activated, otherwise DEATH or SERIOUS INJURY to the CHILD may occur.

Use one child restraint per child.

In cases where there is a need to install a rear facing child restraint on the front passenger seat, use the entertainment display to deactivate the front passenger airbag function or severe injury or even death can occur.

Once the child restraint is removed from the front passenger seat, use the entertainment display to reactivate the front passenger airbag.

When installing a child restraint on the front passenger seat, move the front passenger seat as far rearward as possible.

Please carefully read the safe driving warning label on the sun visor. Always install the child restraint in the rear seat for security reasons and the above warning shall be noted in a special case when the child restraint must be used on front passenger seat.

When child restraint must be used on front passenger seat, please follow the instruction below.

IMPORTANT
• Move the front passenger seat as far back as it can be adjusted to create the largest possible distance between the child seat and the front passenger front airbag. • Move the backrest to the upright position. • Set the seat belt heights so that the seat belt routing follows a natural path adapted to the child seat without excessive deviations. For rear-facing child seats, use the lowest position of the belt height adjuster. • Only use child seats that have been approved by the child seat manufacturer for use on a front passenger seat with front and side airbag.

Important Instructions on Children's Safety and Side Airbags

Children should not be allowed in areas where side airbags may be deployed, there is a risk of serious injury.

Only recommended child restraints suitable for the age, height and weight of the child should be used and firmly fixed in the vehicle.

Do not place any items in areas where side airbags may be deployed, otherwise there is a risk of serious injury.

In the event of a side collision, the side airbags can provide better protection for the passenger. However, when the airbag is triggered, a very strong expansion force is generated, if the passenger's seating position is not correct, the airbags or items in the side airbag deployment area may cause injury.

Therefore, the correct child restraint shall be used to secure the child properly in the seat and ensure the child's seating position is correct and there is enough space between the child and the side airbag deployment area for the airbag to deploy without any hindrance in a traffic accident and thus provide the best protection.

Fixing Child Restraints

Secured Using Lap and Shoulder Belts

Please DO NOT put the rearward facing child restraint on the front passenger seat with the front passenger airbag activated, this may cause serious injury or even death.

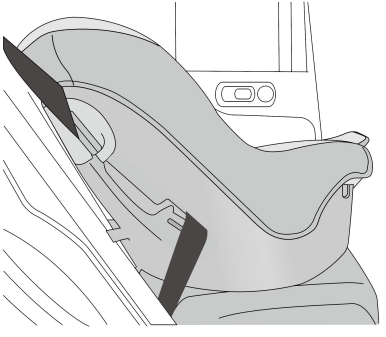

The child restraint can be secured to the rear seat by the lap and shoulder belts.

Secured with ISOFIX/i-Size Device

WARNING

The ISOFIX/i-Size anchorages in the rear seat are designed for use with ISOFIX/i-Size systems only.

WARNING

Child restraint anchorages are designed to withstand only those loads imposed by correctly fitted child restraints. Under no circumstances are they to be used for adult seat belts, harnesses or for attaching other items or equipment to the vehicle.

The 2nd-row seats of this vehicle on both sides are provided with ISOFIX/i-Size interface (as indicated by the arrow in the figure below) connected to the ISOFIX/i-Size child restraint. When installing and removing any child restraint system, always follow the manufacturer's instructions.



- Insert the tapered plastic sleeve into ISOFIX/i-Size anchor between the seat cushion and backrest.
- Push the ISOFIX/i-Size attachment of the child restraint into the tapered plastic sleeve already fitted and snag it in the ISOFIX/i-Size anchor.

- 2nd-row seats Type A

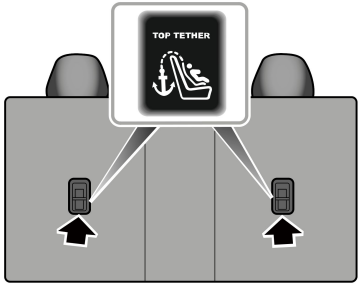

2nd-row seats Type B

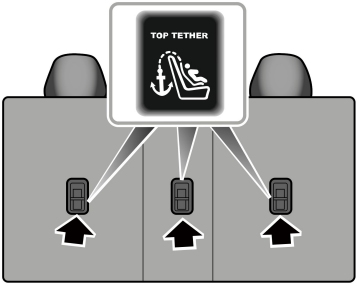

The Top-tether (as arrowed in the figure above) for auxiliary fixation of the child restraint is provided at the back of the rear seat backrest. The single top-tether of the child restraint must pass through space between the rods of the rear seat headrest and dual tether must pass from both sides of the rear seat headrest.

When using seat mounted, universally approved child restraint system, the top tether must be used.

To fasten the top tether of the child restraint system, route the tether under the rear headrest and attach to the anchorage hook.

When fixing the top tether, be careful not to twist the top tether.

If the ISOFIX/i-size lower anchorages are not in use, using the seatbelt, complete the installation in line with the child restraint manufacture's instruction.

- After the installation, push or shake the child restraint with moderate force to confirm it is properly secured.

Child Restraint Groups and Installation Position

Only approved child restraints suitable for children are allowed. Children taller than 1.5 m may directly use the seat belts in the vehicle. Child restraints shall comply with relevant regulations or standards, such as EU regulations ECE-R44 and ECE-R129.

Recommended Child Restraint Systems

ECE-R129 classification is based on a child height

Child Stature	Recommended
40~83cm	Maxi Cosi Pebble 360
76~105cm	Britax Römer TriFix^{2}i-Size
100~150cm	Britax Kidfix i-Size[1]

Note:

[1]For the best protection, it is recommended to use this child restraint sysytem with the included backrest and be sure to attach the seatbelt through Secure Guard and XP-Pad. The side impact extensions should be used and extended to the outermost when in use.

ECE-R44 classification is based on a child weight

Weight Group	Child Weight	Recommended
Group III	22 to 36kg	Graco Booster Basic

Suitable Seats for Attaching Child Restraint Systems

	Seating Position				
Seating Position	**Front Driver**	**Front Passenger[1]**	**2nd Row Left**	**2nd Row Centre**	**2nd Row Right**
Seating position suitable for univeral belted(yes/no)	No	No	Yes	Yes	Yes
I-Size seating position(yes/no)	No	No	Yes	No	Yes
Seating position suitable for lateral fixture(L1/L2)	No	No	No	No	No
Largest suitable rearward facing fixture (R1/R2x/R2/R3)	No	No	R3	No	R3
Largest suitable forward facing fixture(F1/F2x/F2/F3)	No	No	F3	No	F3

	Seating Position				
Seating Position	**Front Driver**	**Front Passenger[1]**	**2nd Row Left**	**2nd Row Centre**	**2nd Row Right**
Largest suitable booster fixture(B2/B3)	No	No	B2/B3	(B2/B3)[1]	B2/B3

Note:

- [1]Only applicable for installation with seat belt.
- During the installation of the CRS, the backrest angle of seats should be adjusted reasonably to ensure that the CRS remains stable.
- During the installation of the CRS, the height of the headrest should be adjusted reasonably or the headrest should be removed to avoid interference with the CRS. Do not remove the head restraint when using a booster cushion with no backrest. Ensureall removed head restraints are stowed safely. Refit the head restraint once the CRS has been removed.

Child Proof Locks

NEVER leave children unsupervised in the car.

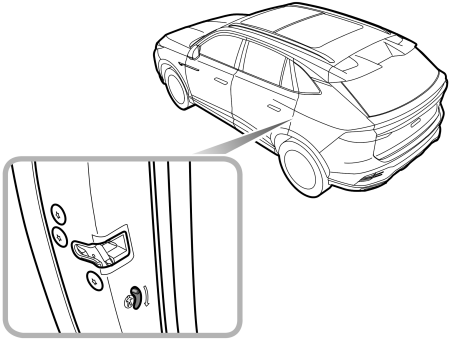

Enabling or disabling the child proof locks

- Open the relevant rear door, in the direction of the arrow, toggle the child proof lock lever to the lock position to engage the child proof locks;
- Move the lever to the unlock position in the reverse direction of the arrow to disable the child proof lock.

With the child proof lock engaged, the rear door on the corresponding side cannot be opened from inside the car, but can be opened from outside the car.

Body Stability Control System

The body stability control system includes Dynamic Stability Control System (SCS) and Traction Control System (TCS)

SCS is designed to assist the driver in control of driving direction. When SCS detects that the vehicle is not moving in the intended direction, it will intervene by applying brake force to the wheels or through the power system to prevent sliding and stabilise the driving direction by correcting the under-steer or over-steer.

TCS contributes to maintaining the control to the vehicle by improving the vehicle's traction trafficability and driving stability. TCS monitors the driving speed of each wheel individually. If spin is detected on one wheel, the system will automatically brake that wheel, transferring torque to the opposite, non-spinning wheel. If both wheels are spinning, the output torque of the power system will be reduced in order to regulate wheel rotation until traction is regained.

SCS and TCS are automatically switched on when the Start switch is placed in position ON/RUNNING/READY. They can be switched off by using the switch located on the entertainment display.

Note: Disabling SCS and will not affect the operation of ABS. Always disable SCS and TCS when driving with snow chains fitted.

Note: If your vehicle has equipped with IBS, the SCS and TCS could not be disabled by switch after the ACC has been activated.

Antilock Brake System (ABS)



When travelling at high speed or there is a danger of aquaplaning, i.e. where a layer of water prevents adequate contact between the tyres and the road surface, ABS cannot overcome the physical limitations of stopping the car in a short distance. In these cases, it is the responsibility of the driver to maintain a safe distance from other vehicles.



DO NOT pump the brake pedal at any time, this will interrupt the operation of ABS and may increase the braking distance.

The ABS is mainly used to automatically adjust the braking force of each brake to prevent the wheels from being locked, thus avoiding dangerous situations such as loss of direction or side slip during emergency braking.

This system enables the driver to maintain control over the steering in case of emergency braking, keeps the vehicle stable and improves the safety factor.

Under normal braking conditions, ABS will not be activated. However, if the braking force exceeds the adhesion between the tyres and the road surface, causing the wheels to lock, the ABS will automatically come into operation. This will be recognisable by a rapid pulsation felt through the brake pedal.

If emergency braking is required, the driver should apply full braking effort to trigger the ABS even when the road surface is slippery.

Note: On soft surfaces such as powdery snow, sand or gravel, vehicles equipped with ABS may have a braking distance greater than those without ABS. This is because the natural action of locked wheels on soft surfaces is to build up a wedge of material in front of (or to the side of, if steering) the tyre contact patch. This effect assists the car to stop when braking or to change direction when steering.

IMPORTANT
• Although ABS can greatly improve driving safety, the real safety still depends on the driver's own standard driving behavior. • The normal braking system remains fully operational and is not affected by partial or full loss of anti-lock braking system (ABS).

Auxiliary Brake System (EBA)

The EBA increase the braking force applied on each wheel during emergency braking to assist the driver in quickly triggering ABS, thereby shortening the braking distance.

Electronic Brake Force Distribution (EBD)

EBD automatically distribute the braking force between the front and rear wheels, so that the vehicle can have good braking performance under different load conditions.

Auto Hold



The auto hold function cannot guarantee the stability of the vehicle when starting off or braking on hills especially on slippery or icy surfaces.



When auto hold stops the vehicle, for reasons such as engine shut-down, releasing the seat belt or pressing the auto hold switch, the electronic parking brake is applied. It cannot be guaranteed that the vehicle will be stabilised in all cases. For example, the rear wheels are on a slippery road surface or the vehicle incline is too great (larger than 20%). Please make sure that the vehicle is safely stabilised prior to exiting.



DO NOT leave the vehicle when the engine is operating and the auto hold is active.



Auto hold cannot guarantee the electronic parking brake operation in all cases where the ignition system is shut down. Please ensure the electronic parking brake is applied and the vehicle is stabilised prior to exiting the vehicle.



The auto hold function should be switched off during the use of automatic car washes, the electronic parking brake may suddenly apply and cause vehicle damage.

If the vehicle is required to stop frequently for long periods while driving (such as wait at the traffic lights, stop on a slope or in urban stop-and-go conditions), the Auto Hold function can assist you in stabilising the vehicle, enabling you to remove your foot from the brake pedal when the vehicle is stationary and the Auto Hold is active.

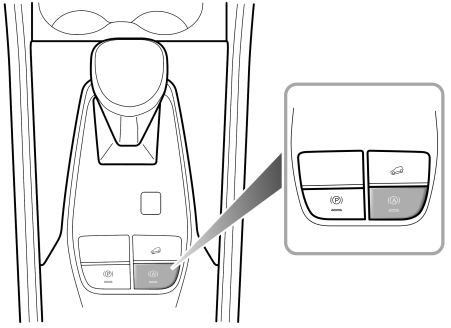

Auto Hold has 3 states as follows:

1 Standby:

With the driver seat belt fastened, the driver door closed and the power system operating, press the auto hold switch to switch the auto hold function from Off to Standby state. The Auto Hold Switch will illuminate.

2 Parking:

When the vehicle is moving forward, depress the brake pedal to a certain depth. After the vehicle is completely stationary, the Auto Hold function is switched from Standby to Parking state. In this state, the green indicator on the instrument panel Ⓟ will illuminate.

When the auto hold is in the Parking state, engaging D gear and depressing the accelerator pedal will automatically release the auto hold function based on the slope.

The Auto Hold will release from the Parking state if R gear is selected.

3 OFF:

Press the Auto Hold switch again to disable the function.

The Auto Hold will exit the parking state under some circumstances such as unfastening the seat belt, turning off the power system, remaining static for a length of time or pressing the Auto Hold switch. At this time, the EPB will be applied.

Note: With the brake pedal pressed, operating the switch to turn the auto hold off, the system will NOT apply the parking brake.

Note: When the vehicle is in P gear, the auto hold function will not be engaged.

Hill Hold Control (HHC)



It is impossible for HHC to keep the vehicle in a standstill state under all circumstances (e.g. slippery ground, snow and ice, etc.) when going uphill and the driver must constantly pay attention to the vehicle condition.



With the HHC in service, the driver is strictly prohibited from leaving the vehicle, otherwise this may result in a serious accident.



During hill start under a stop-and-go road condition, please apply a great amount of pressure on the brake pedal for several seconds before each start.

HHC assists the driver by 'holding' the vehicle during hill starts. If the driver releases the brake pedal, the HHC will hold the vehicle stationary for a short time.

HHC will be activated when the following conditions are met at the same time:

- The driver's seat belt has been fastened and the driver's door is closed.
- The vehicle is stopped steadily on a slope.
- SCS is fault free.
- EPB is fault free and released.
- The power system is started.
- The vehicle is in D or R gear.
- Sufficient force has been applied on the brake pedal before start.

Note: The HHC can also work when the vehicle is reversing uphill.

Hill Descent Control (HDC)



HDC is just an auxiliary function, which cannot ensure that the vehicle is driven down a steep slope at low speed under all circumstances (such as slippery ground, snowy road surface or excessive slope, etc.).



Even when HDC is in use, the driver MUST still pay close attention to the driving state of the vehicle and take active control when necessary. Because in certain cases, HDC may remove itself from the operating state temporarily.



Under some driving conditions on downhill surfaces (e.g. driving down a slope with high speed, small slope, etc.), HDC is inoperative, so the driver shall be required to control the speed by depressing the brake pedal to ensure the safe driving.

The HDC system is an auxiliary function designed for vehicles running on acute downhill surface. It reduces the speed by applying the brake force, thus assists the driver to drive on acute downhill surface smoothly.

Note: When the HDC is working, it is normal for the brake system to generate slight vibration or working noise.

Note: When the HDC is working, do not shift to N gear, since this operation will deactivate the HDC function.

HDC is disabled by default. When the Start switch is in the ON/RUNNING/READY state, the function can be enabled by operating the switch as shown in the figure.

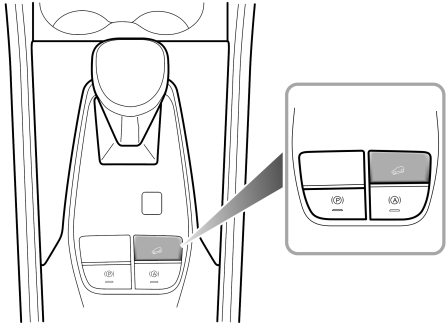

The system has four states as follows:

1 Standby:

Press the HDC switch to enable the function and enter into the standby state. In this state, the indicator on the instrument panel will illuminate green.

2 Operating:

In Standby mode, when the vehicle drives on the acute downhill surface at low speed, if the driver does not depress the brake pedal or the accelerator pedal, HDC will automatically enter the operating. In this state, the indicator on the instrument panel will flash green, which may be accompanied by the working noise of the braking system, the vehicle will also begin to maneuver along the acute downhill surface smoothly.

3 Temporary Deactivation:

Depress the accelerator pedal or brake pedal to a certain extent in the operating state, HDC will temporarily deactivate itself from the Operating state.

4 OFF:

Press HDC switch again to disable the function.

Note: When the vehicle makes a sharp turn on a certain slope, HDC may switch from Standby to Operating.

Note: With HDC in operation, the brake system will automatically pressurise and hold. A certain pressure feedback will be present when depressing the brake pedal, please be reassured, this is normal.

Active Rollover Protection (ARP)

The ARP system is a driver aid to assist the stability of the vehicle. It is not a guarantee that the vehicle will not roll over.

When the vehicle is at risk of a rollover during dynamic driving (such as a lane change) or steady driving (such as loop driving), the ARP will automatically brake the outside wheels to cause the vehicle to understeer and prevent rollover.

Note: With ARP in use, the vehicle will under-steer. It is normal if it fails to steer in accordance to the driver's expectations.

Emergency Braking Hazard Warning Strobe (HAZ)

If the driver makes an emergency braking manoeuvre and certain conditions are met while driving, the brake lamp will automatically strobe to alert the drivers behind, thereby reducing the occurrence of rear-end collisions.

Note: If the hazard warning lamps are being operated manually, this suspends the HAZ function.

After the HAZ function is activated, when the emergency braking manoeuvre has stopped, the brake lamp will stop strobing after several seconds.

Note: As the car speed drops to below 6 mph (10 km/h) and the system no longer flashes the brake lamps, the hazard warning lamps will illuminate automatically. Short press the hazard warning lamp switch or increase your speed to above 12 mph (20 km/h) for 5 s to switch off the hazard warning lamps.

Pedestrian Alert Control System*

When the vehicle is travelling at a low speed, the pedestrian alert system controls the speakers to sound to remind the pedestrians and vehicles around, thus improving the travelling safety.

The speakers sound when all of the following conditions are met:

1 The shift lever is not in P position;

2 The pedestrian alert system has no failure;

3 The vehicle speed is between 0~19 mph (0~30 km/h).

Tyre Pressure Monitoring System (TPMS)

TPMS can not replace routine maintenance and checks of the tyre condition and pressure.

Using equipment that transmits on frequencies similar to that of the TPMS may interfere with the operation of the Tyre Pressure Monitoring System, this may illuminate a warning or register a temporary fault.

TPMS monitors the tyre pressure through radio wave and sensing technique. The TPMS sensor can monitor the pressure of the vehicle's tyre and send it to a receiver in the vehicle. You can view the tyre pressure on the entertainment display. TPMS can remind you of low tyre pressure, but it can not replace normal tyre maintenance. For tyre maintenance, please refer to 'Tyres' in the 'Maintenance' chapter.

Note: TPMS only gives the driver a warning when the tyre pressure is low and it will not inflate the tyre.



If the TPMS malfunction indicator lamp illuminates and the warning message 'XX Tyre Pressure Insufficient' or 'XX Tyre Pressure Low' is displayed, it is advised that you stop the car as soon as possible, check the tyre pressure and inflate the tyre to the standard pressure value. The tyre pressure label attached to the B pillar indicates the standard pressure value required by your vehicle tyres when they are cold.

Driving with under-inflated tyres may lead to the tyres overheating which in turn will lead to the tyres failing. In addition, insufficient inflation will also decrease fuel economy, shorten the life of tyre tread and may affect the operational performance and brake performance of the vehicle.

TPMS Self-learning

When replacing a TPMS sensor or receiver or performing tyre rotation, the TPMS self-learning is required, some vehicles can perform the following operations to complete self-learning:

1 Power off and lock the vehicle for 25 minutes.

2 Drive continuously for 15 minutes at a speed greater than 25 mph (40km/h) and ensure the car has made multiple turns within the journey.

Note: Ensure that the TPMS sensor is an original factory component.

Note: If self-learning fails, the TPMS malfunction indicator lamp will illuminate, please try repeating the above operations.

If you have any questions during the self-learning, please consult a local MG Authorised Repairer for more details.

Comfortable Experience

Seat Adjustment 230

A/C Control Panel 237

Ventilation 239

Intelligent Display 242

Seat Adjustment

Seat Positions and Backrest Angle State

To avoid personal injuries due to the loss of vehicle control, DO NOT adjust the seats while the vehicle is in motion.

An ideal position of the seat shall ensure that you are in a comfortable driving posture, which allows you to hold the steering wheel with your arms and legs slightly bent and conveniently control all the equipment in the car.

DO NOT incline the front seat backrest too far to the rear. Optimum benefit is obtained from the seat belt with the backrest angle set to approximately 25 ° from the upright (vertical). To mitigate the danger possibly caused by an airbag being triggered, the driver and front passenger seats should be positioned as far rearward as practical. When the height of the front seats needs to be lowered, it shall avoid trapping the feet of the rear passengers.

Front Seats

The functions of front seats differ depending on the model configurations.

Power Adjustment (with the driver side as an example)

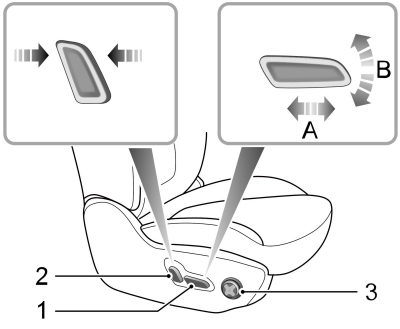

- Forward/rearward seat adjustment

  Push the switch 1 along the direction of A to realise the forward/rearward adjustment of the seat.
- Cushion height adjustment*

  Move the switch 1 along the direction of B to realise the cushion height adjustment.
- Backrest angle adjustment

  Move the switch 2 forward/backward to adjust the backrest angle.
- Lumbar support adjustment*

  Long press the switch 3 to adjust the lumbar support to a desired position.

Manual Adjustment

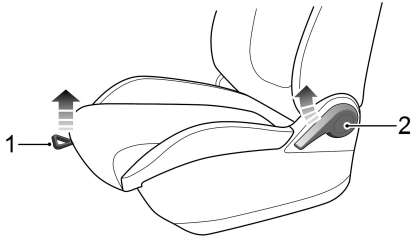

- Forward/rearward seat adjustment
  Lift the handle 1, slide the seat into an appropriate position, then release the handle, make sure that the seat is locked in position.
- Backrest angle adjustment
  Lift the handle 2, adjust the backrest to an appropriate angle; then release the handle, make sure that the backrest is locked in position.

Rear Seats

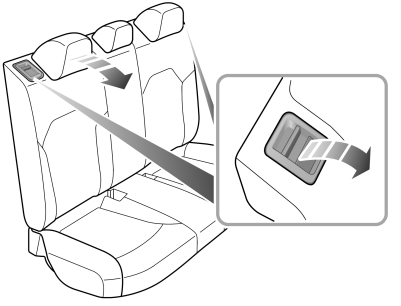

- Folding Rear Seats
  If you want to expand the loadspace, first fully lower (or remove) all the rear seat headrests and then pull up the control handle respectively on both sides to fold the seat backs forward.

Note: If the rear seat head restraints are not fully lowered or the backrest of the front seat is inclined backward excessively, the folding of the rear seat is very likely to damage the back of the front seat, small storage compartment or rear seat head restraint. If the rear seat head restraints are not fully lowered or the backrest of the front seat is inclined backward excessively, the folding of the rear seats is very likely to damage the back of the front seat or rear seat head restraints.

- Unfolding and Locking Rear Seat Backrests
  When unfolding the rear seat back again, pull up and push the seat back until it reaches an appropriate position and the seat back is locked when you hear a click.

Note: When returning the rear seat backrest to the desired position, make sure that the rear seat belts are not trapped.

Headrest Operation

Adjust the height of the head restraint so that the top of it is in line with the top of the occupant's head. This location may reduce the risk of neck injuries in the event of a collision. Do not adjust or remove the head restraints while the car is moving.

Do not hang anything on any head restraint or head restraint rod.

The headrest is designed to prevent rearward movement of the head in the event of a collision or emergency braking, thereby reducing the risk of head and neck injuries.

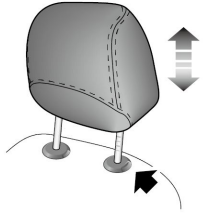

When adjusting a headrest from a low to a high position, pull the headrest directly upward and gently press it downward after it reaches the desired position to make sure that it is locked in position.

To remove the headrest, press and hold the guide sleeve button (as indicated by the arrow) on the left of the headrest, then pull the headrest upward to remove it. When adjusting a headrest from a high to a low position, press the guide sleeve button (as indicated by the arrow) on the left of the headrest and press the headrest downward; release the button after it reaches the desired position and gently press the headrest downward to make sure that it is locked in position.

Seat Heating Function*

If bare skin is in contact with the heated seats for excessive periods of time, it may cause burns.

Based on different model configurations, the front seat heating function has up to three adjustable levels.

The front seat heater switch is located on the A/C control interface and Seat interface of the entertainment display. After the vehicle has been started, press the switch on the corresponding side to turn on/adjust/off the seat heater function. When the seat heating function is activated, the indicator in the switch will illuminate. When the seat cushion or the backrest reaches a certain temperature, the heating function will be deactivated automatically.

IMPORTANT
• Do not cover the heated seats with blankets, cushions or other insulation type objects or materials. • When the seat heating function is used for an extended period of time, if the seat exceeds certain temperature and continues getting hotter, please turn off the heating switch and contact an MG Authorised Repairer. • Overuse of the driver's heated seat may cause drowsiness and could affect safety.

Driver's Seat Memory Function*

For vehicles provided with the memory function, users can extensively personalise their seating position, i.e., matching

the angle of the exterior rearview mirrors and the comfort level of the driver seat (seat cushion height, seat fore and aft position, seat back tilt angle, etc.). The personalised settings can be made and recalled in the entertainment display.

For safety purposes, complete the personalisation settings with the engine OFF and the doors closed. The setting methods are as follows:

1 With the Start switch in the 'ON' state, adjust the position and angle of the driver seat separately and then adjust the exterior rearview mirror angle (refer to 'Rearview Mirrors' in 'Instrument and Control' section for details).

2 Click to enter the Seat interface on the entertainment display, select and long press the corresponding seat position button for 2 seconds to save the seat position for the current driver.

3 Click to enter the Settings interface on the entertainment display, enter 'Vehicle Settings' - 'Vehicle Control' - 'Driver Seat Memory', select the corresponding memory position and click the 'Memorise' icon to save the seat position for the current driver.

Repeat the following steps to add, name and store multiple seat memory positions respectively. To recall a set seat memory position, click the corresponding seat position button.

Repeat the following steps to add, name and store multiple seat memory positions respectively. To recall a set seat memory position, go to 'Vehicle Settings' - 'Vehicle Control' - 'Driver Seat Memory', select the corresponding memory position and click the 'Restore' icon.

Note: If an object blocks the driver seat from moving forward or backward when the memory position is recalled, the function will stop working. If this happens, after moving the obstacle, press the appropriate memory button to try to recall the memory position again.

Driver Seat Welcome Function*

The welcome function of the driver seat is designed to facilitate the driver to get on and off the vehicle and it allows the seat to automatically slide back and forth in a specific situation.

This function is merely provided for power seats with memory function. Enter the Seat interface on the entertainment display, click the settings button and enable this function only after the Driver Seat Welcome Function is enabled.

This function is merely provided for power seats with memory function. Enter the Settings interface on the entertainment display, go to 'Vehicle Settings' - 'Comfort and Convenience' and enable this function only after the Driver Seat Welcome Function is enabled.

When the welcome function of the seat is enabled, the convenience of it can be reflected in the following situations:

- **Exiting The Vehicle**: When the car has come to a stop, the engine has shut down and the Start Switch is 'OFF', opening the door will trigger the seat to automatically slide back, allow the driver to exit the vehicle more comfortably.
  Note: If the initial position of the driver seat is already at the maximum position, the welcome function will not be activated.
- **Entering the vehicle**: Once the vehicle has been unlocked and the operator has sat in the driver's seat with the door closed, turn the start switch to the ACC position, the seat will automatically slide forward to the previous driving position the last time the vehicle was used.

IMPORTANT
During the automatic backward or forward movement of the seat, any manual adjustment on the seat position will interrupt the automatic operation.

A/C Control Panel

Control Panel



1 Heated Rear Window Button

2 Defrost/Demist Button

3 A/C On/Off Shortcut Button

A/C On/Off Shortcut Button



Press the A/C On/Off shortcut button to turn the A/C system on or off.

Note: All functions will revert to the state prior to switching off if you operate the A/C system using the A/C Control Shortcut.

Defrost/Demist Button



Press down the Defrost/Demist button, the button indicator lamp will illuminate and the system will enable the Defrost/Demist function to remove mist or frost from the front windscreen and front windows.

Pressing the Defrost/Demist button again will exit the defrost/demist function and the system will return to the previous state.

In defrost/demist mode, turning the cooling switch on or off and switching air circulation modes will not exit the defrost/demist mode; operating the air distribution mode will exit the defrost/demist mode.

Heated Rear Window Button



The heating elements on the inside of the rear window are easily damaged. DO NOT scrape or scratch the inside of the glass. DO NOT stick labels over the heating elements.



Press the heated rear window button to enable or disable heated rear window function. The function is

enabled when the indicator illuminates and is disabled when the indicator goes out. After the heated rear window function is turned on, it will automatically turn off after running for a certain period of time.

Note: The heated rear window function will only operate when the vehicle is in the READY/RUNNING state.

Ventilation

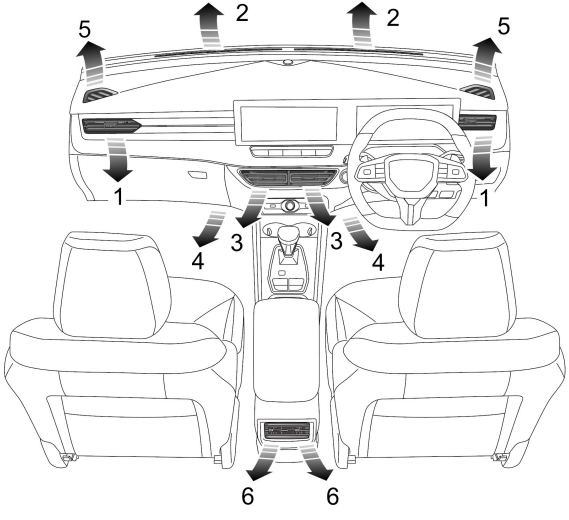

1 Side Vents
2 Front Windscreen Vents
3 Centre Vents
4 Front Seat Footwell Vents
5 Front Window Side Vents
6 Rear Centre Vents

There are also 2 rear seat footwell vents, respectively on the floor under the front seats (not shown in the figure).

The A/C system is used to adjust the temperature, speed, humidity and cleanness of the air inside the car. Fresh air is drawn in through the air intake grille under the front windscreen after filtered by the A/C filter element. Always keep the air intake grille clear of obstructions such as leaves, snow or ice.

A/C Filter Element

The A/C filter element is used to filter the air. To remain fully effective, the filter element should be replaced at the recommended service interval.

Vents

Regulation of Centre Vents

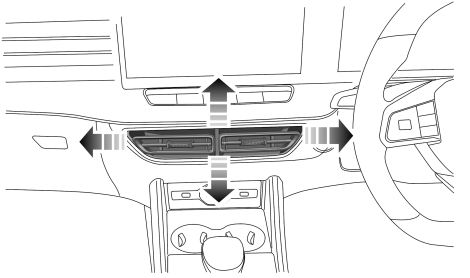

Toggle the knob in the centre of the louvres from side to side to open or close the vent. Direct the air flow by moving the knob up and down or from side to side.

Regulation of Side Vents

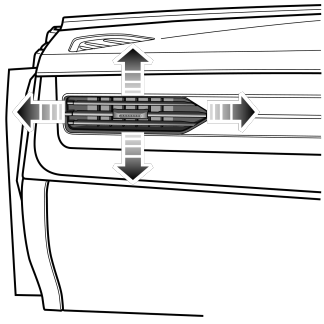

Toggle the knob in the centre of the louvres from side to side to open or close the vent. Direct the air flow by moving the knob up and down or from side to side.

Regulation of Rear Centre Vents

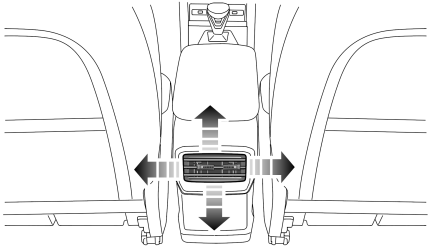

Toggle the knob in the centre of the louvres from side to side to open or close the vent. Direct the air flow by moving the knob up and down or from side to side.

Intelligent Display

Main System Interface



1 Status Bar
It displays outside temperature, bluetooth, time, etc.

2 Application Cards
Including Map*, Music, Bluetooth Phone, settings, etc. Click to enter the relevant function interface.

3 Menu Bar
Including HOME, music, AC and other shortcut switches.

Note: The images in this chapter are for reference only. According to different vehicle configurations, software versions and market regions, the content displayed on the interface may vary. Please refer to the actual vehicle interface diagram for accuracy.

Bluetooth Phone

Bluetooth Pairing and Connection

Steps for Bluetooth pairing and connection are as follows:

1 In the [Bluetooth] interface of the [Settings], turn on [Bluetooth] switch.

2 Search for nearby available devices, locate the target device and click to connect.

3 The Bluetooth pairing request will be received on the mobile phone and the entertainment player. Click 'pair' to confirm.

4 After successful pairing, the status bar will display the Bluetooth icon. If pairing fails, please repeat the above steps.

Phone Functions

After the mobile phone Bluetooth is paired and connected with the vehicle Bluetooth, upon authorisation by the user, the contacts, call history and other data in the mobile phone will be synchronised to the vehicle; you can make a call by tapping a contact, call history or entering a number on the dial.

Vehicle-Mobile Phone Interconnection

Note: Due to the differences of mobile phone models and system versions, some mobile phones may not be able to use the vehicle-mobile phone interconnection function normally.

CarPlay

This function can realise the interconnection between iPhone functions (Map, Music, Phone Call, Voice Recognition, etc) and the entertainment player.

1 Confirm that your iPhone has the CarPlay function.

2 Connect iphone to the entertainment player by using the original USB cable (about one meter is recommended).

3 In the main interface, touch [Apple CarPlay] to enter the CarPlay interface.

4 After the vehicle and mobile phone are successfully connected, you can operate the iPhone on the system mainframe.

Android Auto

This function can realise the interconnection between Android mobile phone functions (Map, Music, Phone Call, Voice Recognition, etc) and the infotainment screen.

Note: When using Android Auto, ensure that Bluetooth is on.

1 Use a USB connecting wire to connect the mobile phone to the infotainment screen.

2 In the main interface, touch [

Note: The images in this chapter are for reference only. According to different vehicle configurations, software versions, and market regions, the content displayed on the interface may vary. Please refer to the actual vehicle interface diagram for accuracy.

] area to enter the Android Auto.

3 After the vehicle and mobile phone are successfully connected, you can operate the Android Auto on the system mainframe.

User*

Displays account information, travel plan, POI and message.

Settings

Vehicle Settings

Vehicle control settings can be made for the lighting, instrument pack, driver assistance and other functions.

System Settings

Click [Settings] on the main interface to enter the System Settings interface, where you can set Bluetooth, wireless network*, hotspot*, sound, screen brightness, language, etc.

Map and Navigation*

Select map on the main interface to enter the map interface, which supports positioning, search, path planning, navigation and other functions.

Entertainment

You can choose the following audio applications on the main interface:

- Radio
  You can choose to listen to FM, AM or DAB* stations.
- USB Music

Plug the USB device in the USB port to play music from the USB device.

- Bluetooth Music

  Connect the Bluetooth on the mobile phone to the entertainment player to play music from the phone. For Bluetooth connection steps, refer to the 'Bluetooth Pairing and Connection' in 'Bluetooth Phone'.

- Online Music*

  The user needs to log in to his/her personal third-party music account first before listening to music.

- USB Video

  Plug the USB device in the USB port to play videos from the USB device.

Intelligent Driver Assistance

Intelligent Driver Assistance Description 248
Cameras and Radars 250
*Adaptive Cruise Control** 255
*Intelligent Cruise Assist** 265
Intelligent Overspeed Alarm 269
Speed Limit Assist System 271
*Constant Speed Cruise Control System** 276
Lane Keeping Assist 279
*Forward Collision Assist** 283
*Rear Driving Assistance System** 287
Ultrasonic Sensor Parking Assist 295
*Reversing Assist System** 298
*360 Around View Monitor** 299
Driver Monitoring System 301

Intelligent Driver Assistance Description

Intelligent Driver Assistance Disclaimer

In order to use the intelligent driver assistance functions, the user and the driver must pay special attention to, understand and accept the following:

1 All currently available intelligent driver assistance functions require the driver to actively monitor and take over the entire driving process and the vehicle has not yet been fully automated. The safety and reliability of these functions will need to be demonstrated by more driving miles in order to reach a level of driving that far exceeds that of a human driver. The realization of autonomous driving is also dependent on legal regulations and administrative approvals (which may take longer in some jurisdictions). As these intelligent driver assistance functions evolve and improve, your vehicle will be updated and upgraded in a feasible manner (whichever is feasible for your vehicle's software and hardware at that time).

2 Users and drivers should carefully read, study, understand and implement the contents of the corresponding Owner's Handbook and use and service the vehicle (and the related functions) in accordance with the requirements therein (in particular, the descriptions of the function modules and restrictions on the use of the Intelligent Driver Assistance and the Intelligent Cockpit). Users and drivers should always bear the responsibilities and obligations stipulated in the Road Traffic Safety Law and other laws and regulations and always take over the steering wheel and the brakes. The user or the driver shall bear all the responsibilities and consequences of any personal or property damage caused by the user's or the driver's faults (e.g., failing to use the vehicle in accordance with the requirements of the Owner's Handbook or failing to take over the steering wheel and/or the brakes at any time in accordance with the requirements of the Road Traffic Safety Law, etc.).

3 Intelligent driver assistance functions can only play an auxiliary role under certain conditions and cannot replace the driver's observation of the road conditions. The driver should drive with caution and should not

rely on this function. The Owner's Handbook has already fulfilled its obligation to clearly explain the various limitations on the use of each auxiliary function (i.e., under what circumstances certain functions may not be activated or may stop working).

4 Intelligent driving assistance functions have requirements on the weather, road surface, driver operation and other objective conditions and may fail, be inappropriate or untimely under the influence of a number of factors, which is not equivalent to the existence of design and application defects in the product. If any user or driver cannot understand or accept the content of the above terms, please do not use the relevant intelligent driver assistance function. If the function has been turned on, please exit immediately.



Camera and radar operation may be impaired in certain driving situations, weather and road conditions. In areas where there are complex traffic conditions such as intersections road junctions with congestion or poor general conditions, the driver MUST take full control of the vehicle.

The intelligent driver assistance system, through cameras and radar, are able to detect road and environmental information in front of the vehicle and, when certain conditions are met, provide warning messages or intervene in the vehicle in order to assist the driver in maneuvering the vehicle in a safer and more reliable manner.

Note: DO NOT operate any infotainment switches whilst driving. If you wish to make any settings changes, please pull over when it is safe and legal to do so.

Cameras and Radars

Driver Assistance Cameras

The vehicle is equipped with the following visual cameras: surround view camera, front view camera module and parking camera (subject to actual vehicle configuration).

The camera carries out target identification in the form of vision and provides identification information for related functions after identifying the target in the surrounding area of the vehicle.

Camera Mounting Position

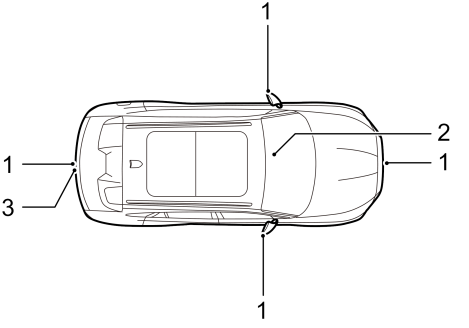

1 Surround View Camera

2 Front view camera module

3 Parking Camera

Note: The configuration of cameras are subject to the specification of the vehicle purchased.

Note: To ensure that the front view camera works properly, always keep it clean and free of ice, snow, water, dust, etc.

Note: To ensure the camera works properly, always keep the windshield in front of the camera clean with no objects blocking the view between the camera and the windshield.

Note: Please wipe camera lenses with a soft cloth or wash with water (of low pressure) when foreign objects are found on the camera surface. Do not use a high pressure water jet to flush the camera and do not use abrasive or sharp objects to clean the camera.

Camera Calibration

Except for authorised after-sales service centre personnel, others are strictly prohibited from removing and refitting or replacing. The front view camera module must be re-calibrated in the event of the following conditions:

- The module is maladjusted, e.g. the camera position has changed;
- Removal and refit of the camera or camera bracket;
- Removal and refit of the windscreen;
- The four-wheel alignment parameters have changed.

Note: If the front detection radar is subject to strong vibration or slight impact, the mounting position of the front detection radar needs to be checked and re-calibrated as necessary.

Note: Please consult an MG Authorised Repairer for more details about camera calibration.

Camera detection performance will be affected in the following cases:

- Camera defaced or covered by obvious foreign objects; covered by ice, snow, mud, dust.
- Poor visibility or bad weather (heavy rain, snow, fog, haze, smoke, dust, sandstorms, etc.).
- When light conditions are poor such as evening, night, unlit tunnels, etc.
- Dust and water spray raised by sanitation vehicles and sprinklers working in the adjacent lane; or water spray raised by the front or side vehicles on the highway in poor weather conditions. Unpaved roads, construction areas.
- Strong light (e.g., headlights of an oncoming vehicle, headlights of a vehicle behind you or direct sunlight) obstructs the camera's view.
- Strong light, slanting sunlight and other excessive light conditions (backlighting is more common at high altitudes).

- Flickering street lights when travelling through boulevards at night; rapid jumps in light and darkness (e.g., tunnel entrances and exits), etc.
- Travelling on the high-reflection road, for example, after the rain, snow or other high-reflection conditions.
- Hot or cold weather temperatures interfere with or affect sensor performance to some extent.
- Camera field of view is partially or completely blocked by objects such as stains, gum, oil, stickers, etc. on the windscreen; foreign objects such as decorative strips, stickers, etc. block the detection field of view; the outside of the windscreen is not sprayed and scraped clean in a timely manner.
- The windscreen in the camera view is broken or has cracks or other optical-affected changes;
- The speed of vehicle wiper is slow or the wiper blade is worn, aged and/or warped, resulting in the inability to wipe clean the front camera field of view and there are water stains and scrape marks in the sensor field of view.
- The windscreen demist/defrost is not effective under rainy and humid conditions.
- The camera is not fixed in place or is not firm or the fixing structure itself shakes.
- Failure to calibrate the camera after removal and refit or replacement.

Driver Assistance Radars

The vehicle is equipped with the following radar: ultrasonic radar (subject to actual vehicle configuration).

Radars are only used to provide identification information for relevant functions after detecting targets within the vehicle perimeter.

Radar Mounting Position

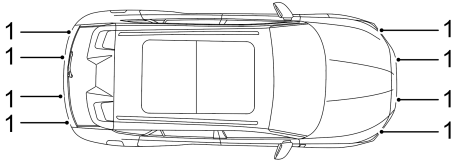

1 Ultrasonic Radar

2 Millimeter Wave Radar

Note: The configuration of the radars is subject to the vehicle purchased.

Note: To ensure that the radars work correctly, always keep them clean and free of ice, snow, water, dust, etc.

Note: Please wipe with a soft cloth or wash with water (of low pressure) when foreign objects are found on the radar surface. Do not use a high pressure water jet to flush the radar and do not use abrasive or sharp objects to clean the radar.

The radar detection performance will be affected in the following cases:

- The radar or bumper is covered with foreign objects such as snow, ice, mud, sewage, tape, trim, etc.
- The bumper is painted with unauthorised paints and spraying processes.
- The radar or bumper has damaged or the mounting position is changed.
- Electromagnetic interference from other equipment.
- Tight and closed environments such as ferries, three-dimensional garages, etc.
- The vehicle is being towed.

- The radar may not work properly due to limited detection performance in an open field (such as an open parking lot) or on an open road.

Note: Any snow on the radar should be removed with a brush, while any ice is preferably removed with a deicing spray.

Adaptive Cruise Control*



The adaptive cruise control system is designed as a comfort system. It provides assistance to the driver, but DOES NOT replace any of the driver's responsibilities. When using the adaptive cruise control system, it is important that the driver maintains concentration at ALL times and is prepared to take action. Otherwise, accidents or personal injuries may occur.

Depending on whether there is a vehicle ahead, the adaptive cruise control can conduct automatic switching between constant speed cruise and car-following cruise. With the adaptive cruise control, the vehicle is allowed to conduct constant speed cruise within a certain speed range or conduct car-following cruise by setting the distance between the vehicle and the vehicle ahead. If a vehicle is detected in your path of travel, the ACC may apply moderate braking or acceleration to maintain the selected following distance.

Note: The adaptive cruise control system is designed for highways and roads in good condition. It is recommended that it is NOT used on urban roads and mountain roads.

Adaptive Cruise Activation



After following the vehicle ahead to a stop, the driver must ensure that there are no obstacles or other traffic participants, such as pedestrians, directly in front of the vehicle before starting off to follow the vehicle ahead again.



Whilst using the car following cruise function, it is strongly recommended that the driver does not touch the accelerator pedal. Any activation of the accelerator will not allow the adaptive cruise control system to automatically apply the brakes. The vehicle is only controlled by the driver's manipulation of the accelerator pedal.

DO NOT exit the vehicle when the adaptive cruise control system keeps the car stationary. Before exiting the car, the shift control knob should be in the P position and the Start switch should be OFF.

If the adaptive cruise control system keeps the car stationary, the driver still needs to pay full attention and be ready to apply the brakes manually. Note that if the system is disabled, turned off or cancelled, the vehicle will no longer stay still, it may move forward or slip backward.

When driving on a bend, the adaptive cruise control may actively reduce the vehicle speed to maintain vehicle stability and safety.

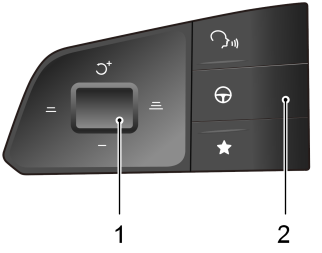

- Adjustment Knob(1)
- Pilot Switch(2)

ACC can be set by the combination of the switch on the entertainment display and the switch at the left side of steering wheel.

1 If the switch on the entertainment display is in the 'OFF' state, the ACC is in OFF.

2 When the switch on the entertainment display is ON and the Pilot switch(2)is pressed briefly, the ACC

indicator on the instrument pack turns blue and ACC is activated, with the target speed being the actual speed of the vehicle at the time of activation (if the speed is less than 20 mph(30 km/h), the target speed will be set at 20 mph(30 km/h). If the speed of the vehicle ahead is greater than the cruise target speed of your vehicle, your vehicle will maintain the target speed to conduct constant speed cruise; if the speed of the vehicle ahead is lower than the cruise target speed of your vehicle, it will enter the car-following cruise feature, and the schematics of the vehicle ahead will be displayed on the instrument pack. In the car-following cruise, you can follow the vehicle ahead to a stop. If the stop time is less than a certain time, the vehicle may automatically start off to follow the vehicle ahead, otherwise the driver needs to re-activate adaptive cruise control according to the prompts on the instrument pack.

3 The speed range allowed to be activated is 9-80 km/h(15-130 km/h)(when there is a car in front of you and it is less than a certain distance away, the activated permissible speed range is 3-80 mph(5-130 km/h))。

Note: Manual deactivation of either the Stability Control System (SCS) or Traction Control System (TCS) will inhibit the operation of the adaptive cruise control system.

Note: Manual deactivation of either the Stability Control System (SCS) or Traction Control System (TCS) will inhibit the operation of the adaptive cruise control system.



After following the vehicle ahead to a stop, the driver must ensure that there are no obstacles or other traffic participants, such as pedestrians, directly in front of the vehicle before starting off to follow the vehicle ahead again.

Note: Scenarios in which the adaptive cruise control may not follow the vehicle ahead to a stop include, but are not limited to, the following scenarios:

- ***The vehicle ahead decelerates sharply;***
- ***A stopped vehicle crosses your lane, is on the lane line or partially intrudes into your lane;***
- ***The vehicle ahead cuts out, so that a new following target suddenly appears ahead;***
- ***The overlap rate between the stationary target ahead and your vehicle is low;***
- ***The speed difference between your vehicle and the target vehicle ahead is excessive;***
- ***The target ahead is a special-shaped vehicle, a vehicle with loaded objects protruding from the side or rear or a modified vehicle;***
- ***The target ahead overlaps with another large or small vehicle.***

Adaptive Cruise Target Following Distance Adjustment

When the adaptive cruise control is activated, move the adjustment knob right(to increase the distance)or left(to decrease the distance)to adjust the following distance, switch among 3 distance settings and display it on the instrument pack.

Select appropriate following distance according to the different relative speed with the vehicle ahead, the higher the relative speed, the longer the following distance is selected. Considering the traffic and weather conditions, the optional following distance range may not be suitable for all drivers and driving conditions.

Adaptive Cruise Target Speed Adjustment

When the adaptive cruise control is active:

- Use the accelerator pedal to reach the desire speed and press the adjustment knob(I), then release the adjustment knob and accelerator pedal, the vehicle will cruise at the desired speed.
- Move the adjustment knob upward and hold, the target speed will increase until the desired set speed appears on the instrument pack, then release the knob. When it is confirmed that there is no vehicle ahead or the vehicle ahead is beyond the pre-selected following distance, the vehicle speed can be increased to the set speed.

- Move the adjustment knob downward and hold, the target speed will decrease until the desired set speed appears on the instrument pack, then release the knob and the speed will be decreased to the set speed.
- When adjusting the target speed with the adjustment knob, move the knob slightly,each adjustment will make the target speed change; moving the knob in a direction whilst holding it continuously will increase or decrease the target speed until the knob is released .

Note: If the vehicle ahead continuously makes harsh accelerations or decelerations, the ACC system may not be able to keep the following distance accurately, the driver must pay attention and perform operations such as braking or changing lanes in time according to the surrounding environment.

Adaptive Cruise Pause

When the adaptive cruise control system is activated, short press the Pilot switch to cancel the function and the system will switch to the Standby state.

Automatic Deactivation of Adaptive Cruise

In the following situations, the ACC may be automatically deactivate, which requires the driver to manipulate the vehicle on his/her own:

- Turn off the ACC switch on the entertainment display;
- Depress the brake pedal when the vehicle is not stationary;
- Move the shift lever to any gear other than Drive gear;
- The driver unfastens his/her seat belt;
- Depress the accelerator pedal for a long time;
- Any door or the bonnet/tailgate is opened;
- Pull up the EPB switch;
- Follow the vehicle ahead to a stop and the stop time exceeds a certain time.
- The camera or radar is blocked or surroundings trigger the safe exit mechanism of sensor or the system fails.
- The vehicle speed is greater than certain value.

Note: If following the vehicle ahead to a stop with the adaptive cruise control system enabled, if any of the following conditions occur whilst the vehicle is in a stopped state, the EPB will automatically be applied:

- ***The driver unfastens the seat belt;***
- ***The driver door is opened;***
- ***The stationary time exceeds the preset time period.***

Adaptive Cruise Override

If the driver actively depresses the accelerator pedal when the ACC is active, the speed will be controlled by the accelerator pedal and may be above or below the previously set target cruise speed. When the accelerator pedal is released, the ACC will resume to the preset target cruise speed.

Adaptive Cruise Resume

If the adaptive cruise control remains on after the pause, reactivate it by moving the adjustment knob upward. In this case, the target cruise speed is the target speed before the adaptive cruise control exits and the following distance is the following distance before the adaptive cruise control exits.

Clearing Target Speed Memory

Turning off the ACC switch on the entertainment display will turn off the adaptive cruise control system, synchronously clearing the system's set speed in the memory.

The ACC function is limited or does not work even if it is enabled in the following conditions:

- Encounters a vehicle or object which is stationary or traverses the lanes;
- Identified road traffic participants (falling tyres, rocks, trees, large animals, etc.);
- Long-distance obstacles may cause a fault or missed recognition in the main target selection of the adaptive cruise control function, resulting in unexpected or late braking.
- Approach the vehicle ahead so fast that the system cannot apply sufficient brakes;
- There is oncoming traffic or the vehicle ahead brakes in an emergency;
- The vehicle ahead reverses;
- A vehicle suddenly cuts into the lane in front;

- Encounters a vehicle driving at a low speed;
- Special-shaped vehicles;
- Encounters a vehicle with loaded items protruding from the body contour;
- Encounters a vehicle with a higher chassis (e.g., a truck);
- Encounters specially painted, modified vehicles or obstacles;
- Encounters pedestrians, non-motor vehicles or animals;
- The vehicle is driving on an uneven road or a complex traffic road section;
- The vehicle makes a sharp turn;
- The vehicle enters or exits a tunnel or is driving in the tunnel;
- The vehicle is driving under the mottled tree shadow;
- Overload at the cargo area causes the vehicle head tilting upward;
- Follow a vehicle to drive into/out of a curve;
- The rate of overlap with the vehicle ahead is small;
- Steep downhill roads;
- A flat road turns uphill;
- Continuous steep uphill and downhill;
- Continuous curves;
- The vehicle ahead brakes suddenly;
- In heavy rain/dense fog/snowstorm/low-visibility weather conditions;
- Low light intensity at night, direct sunlight or backlit environment;
- Slippery, low-adhesion road surfaces (such as ice, snow, wet);
- Roads affected by bad weather (puddles, falling trees, flooded roads);
- Structural modifications to your vehicle, such as lowering the vehicle body or changing the body dimensions that may degrade adaptive cruise performance or cause function failure;
- The trailer mode is enabled.

Special Driving Environments

In the following circumstances, if the ACC is in use, the driver shall pay special attention to selecting suitable speed and prepare for taking measures at all times.

1 When turning at an intersection or following a vehicle into or out of a curve, the ACC may be unable to

detect the vehicle ahead on the same lane or may respond to a vehicle on another lane.

Note: DO NOT use the adaptive cruise control system on entrance/exit ramps or sharp curves.

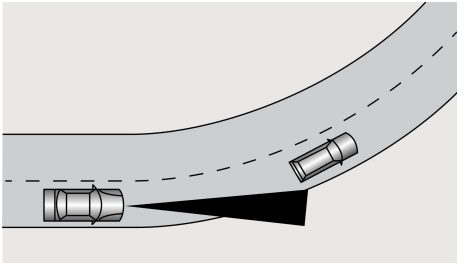

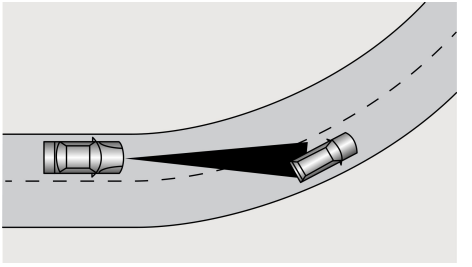

2 If the vehicle ahead changes lanes, but not driving into the target lane completely, the ACC may be unable to detect the vehicle.

If the vehicle ahead changes lanes, but does not exit the current lane completely, the ACC may determine that the vehicle ahead has already left and accelerates.

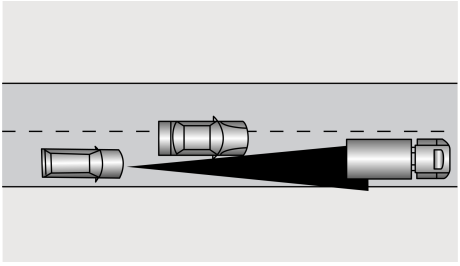

3 When driving on a steep slope, the ACC cannot detect the vehicle on the same lane, so please do not use the ACC.

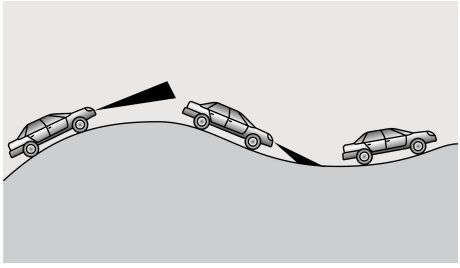

4 When traveling with a vehicle ahead with a small body width overlap(A), the ACC may be unable to detect the vehicle.

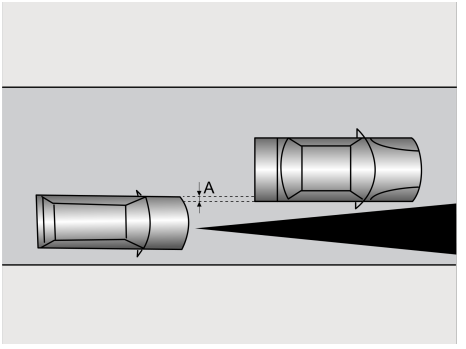

Note: Please DO NOT use the adaptive cruise control system in the following situations:

- ***Driving in bad weather conditions;***
- ***When the ambient light is insufficient, the light is too bright or the forward lighting of the vehicle is poor;***
- ***Driving on rough or poor road surfaces;***
- ***Driving through roadworks or construction sites;***
- ***Driving on low friction roads (the rapid change of the tyre traction may result in the excessive wheel slip).***

Intelligent Cruise Assist*

Intelligent cruise assist (ICA) is an auxiliary function that assists the driver, but does not replace the driver in driving. Due to the limitations of system detection and control when using the intelligent cruise assist function, the driver must always hold the steering wheel, be aware of the surroundings and correct or take over the steering wheel control when necessary; otherwise accidents or personal injuries may be caused.

Intelligent cruise assist (ICA) is an auxiliary function that assists the driver but does not replace the driver in driving. Due to the limitations of system detection and control when using the intelligent cruise assist function, the driver must always hold the steering wheel, be aware of the surroundings and correct or take over the steering wheel control when necessary; otherwise when operating the vehicle.

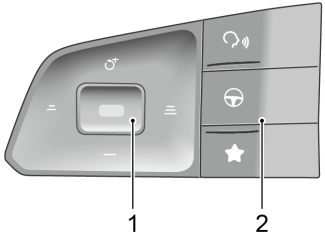

- Adjustment Knob(1);
- Pilot Switch(2);

The function switch is located on the entertainment display and the system can be turned on/off in the appropriate Driver Assistance interface.

When the following conditions are met:

- The ICA switch on the entertainment display is on;
- The system detects the lane lines on both sides of the vehicle;
- The vehicle is in Drive gear.

A short press on the Pilot switch activates the intelligent cruise assist. The intelligent cruise assist works on the basis of adaptive cruise control. If the lane lines ahead on both sides are clear, the system will assist the vehicle in driving within the lane lines; at low speeds, if there are other vehicles ahead and the lane lines are not clear, the system can assist the vehicle in following the track of the vehicle ahead.

The speed range allowed to be activated is 9-80 mph(15-130 km/h)(when there is a car in front of you and it is less than a certain distance away, the activated permissible speed range is 3-80 mph(5-130 km/h))。

Note: When ACC is active and the above conditions are met, the intelligent cruise assist system can be activated without pressing the Pilot switch.

When the system detects that the driver has not controlled the steering wheel for a certain period of time, it will give warnings to prompt the driver.

Note: The driver shall adjust the vehicle speed and the following distance according to the road visibility, weather and road conditions. The intelligent cruise assist (ICA) system does not respond to pedestrians, animals, stationary vehicles and vehicles that drive across the lane or oncoming vehicles on the same lane. If the intelligent cruise assist system cannot reduce the vehicle speed sufficiently, the driver shall apply the brake by depressing the brake pedal. If another vehicle cuts into the current lane under congested conditions, the system may not brake timely due to the fact that the cut-in vehicle does not enter its detection range and the driver shall actively apply the brake.

The intelligent cruise assist function will be limited or does not work in the following conditions:

- There are scenarios where the adaptive cruise function is limited;
- Vehicle speed is greater than a certain value;
- The driver turns on the turn signal lamps;
- The driver depresses the accelerator pedal rapidly or makes emergency steering;

- The system recognises that the driver does not manipulate the steering wheel for a period of time;
- When the system implements the control, the driver is manipulating the steering wheel;
- The lane line is too thin, damaged or fuzzy;
- The lane lines change, for example, the lane lines are changed to fish scale lines;
- Road disturbance (undulations, bumps);
- The lanes ahead merge (lane closure);
- The vehicle is driving on the curve with a small curvature radius or on too narrow or too wide road;
- The vehicle has just entered the road section with lanes or has passed the road section without lane lines;
- Complex road conditions such as intersections, T-junctions, lane lines divided or merged and lane lines bent;
- Gravel, grass, trees or road edges composed of different materials;
- The vehicle is in Reverse gear;
- The vehicle makes rapid lane change or lateral sway;
- When driving along the track of the vehicle ahead, the turning radius of the vehicle ahead is too small;
- The anti-lock brake system(ABS)and the dynamic stability control system(SCS)are activated;
- The anti-lock brake system(ABS), dynamic stability control system(SCS), electric power steering system(EPS), etc. fail.
- The trailer mode is enabled.

It is recommended to turn off the intelligent cruise assist in the following situations:

- Driving in a 'sport' style manner;
- Drive in bad weather;
- Drive on poor road section;
- Drive through road construction site;
- When driving the vehicle on a steep, meandering road or slippery road (such as snow and ice road, wet road, road with puddle);
- When driving off-road or on an unpaved road.

IMPORTANT
• In cases where the number of lanes increase or lanes merge, the driver MUST take full control of the vehicle. • In areas where there are complex traffic conditions such as intersections or road junctions with congestion, the driver MUST take full control. • The driver MUST be aware of the surroundings and be able to assume full control of the vehicle when using the traffic jam assist system to track the car in front should the need arise.

Note: The driver shall adjust the vehicle speed and the following distance according to the road visibility, weather and road conditions. The intelligent cruise assist (ICA) system does not respond to pedestrians, animals, stationary vehicles and vehicles that drive across the lane or oncoming vehicles on the same lane. If the intelligent cruise assist system cannot reduce the vehicle speed sufficiently, the driver must apply the brakes. If another vehicle cuts into the current lane under congested conditions, the system may not brake timely due to the fact that the cut-in vehicle does not enter its detection range and the driver shall actively apply the brake.

Intelligent Overspeed Alarm

The intelligent speed assist system is an auxiliary function. It may display an incorrect speed limit value or no speed limit value in the instrument pack due to various factors. As a result, the vehicle speed is not restricted within the correct range. The driver still needs to observe the speed limit of the road traffic and speeding is strictly prohibited.

The front view camera cannot recognise speed limit signs painted on the road surface. The driver MUST observe these speed limits and adjust the their speed accordingly.

The setting interface of the intelligent overspeed alarm is located on the entertainment display. The driver can switch the system on or off through the soft switch on the entertainment display.The vehicle detects the speed limit sign (e.g. ⑥⓪) on the roadside through the front view camera. When the vehicle speed is greater than the speed limit value in the speed limit sign speed indicator, the speed indicator blinks and an alarm tone emits to prompt the driver to control the vehicle speed.

When the intelligent overspeed alarm is activated, the speed limit sign speed indicator illuminates. When the vehicle passes the first recognised speed limit sign, the speed limit sign speed indicator shows the real-time speed limit value. If the vehicle encounters a speed limit sign with the same speed limit value, the speed limit value in the speed limit sign speed indicator is not updated.

Note: If the vehicle changes lane, makes a turn, turns around in the intersection or identifies the speed limit cancellation, the original speed limit value on the instrument pack may be reset and displayed as '–' till a new speed limit sign is detected. If the conditions are not met, the original speed limit value will maintain and not be reset. The driver MUST observe the speed limits and adjust their speed accordingly.

The intelligent overspeed alarm may not work properly in the following cases:

1 The detection performance of the front view camera is affected;

2 The vehicle is driven at a high speed;

3 The speed limit signs are blocked by the trees at the roadside, ice/frost, snows, dusts, etc; or the speed limit signs are placed improperly or damaged;

4 When there are multiple speed limit signs over the road or at the roadside, the overspeed alarm will be issued according to the highest speed limit value.

IMPORTANT

- The camera may not correctly recognise speed limit signs during poor lighting conditions, bad weather, non-standardidsed or sheltered speed limit signs or the camera's own restrictions which include the recognition of similar signs (e.g., recognise a weight limit sign as a speed limit sign or recognise a minimum speed sign as the maximum speed sign).
- The camera cannot identify the text provided below the speed limit sign, such as Auxiliary Lane, 100 m Ahead, School Section, 7:00-10:00 , etc. The camera will identify the speed limit sign with text as a normal speed limit sign.
- Some drastic and rapid steering operations made by the driver may be judged as changing lane or turning around in the intersection by the system, resulting in the identified speed limit signs being cleared.
- In cases where a speed limit sign contains multiple speed limits. The camera may not identify all the speed limits.

Speed Limit Assist System



The speed limit assistance system is only an auxiliary function. In cases where the speed limit sign is not standardized or the front view camera is blocked, the wrong speed limit value or no speed limit value may be displayed on the instrument pack and the vehicle is not restricted in the correct speed range, the driver will remain responsible for real-time evaluation of the speed limit on the road.



The front view camera cannot recognise speed limit signs painted on the road surface. The driver MUST observe these speed limits and adjust the their speed accordingly.

The setting interface of the speed limit assist system is located on the entertainment display. Enter the Vehicle Settings interface, find the Speed Limit Assist System Settings interface and choose a mode: Intelligent, Manual, Off.

1 Intelligent: i.e. Intelligent Speed Limit; The vehicle detects roadside speed limit signs (e.g. ⑥⓪) through the front view camera and actively intervenes in the speed control to keep the vehicle speed within the permitted maximum speed limit.

2 Manual: i.e. Manual Speed Limit; The driver sets the maximum speed via the button on the left side of the steering wheel and actively intervenes in the speed control to keep the vehicle speed within the permitted maximum speed limit. Refer to 'Manual Speed Limit Vehicle Speed Setting'.

3 Off: Turn off the speed limit assist system.

Note: If the mode selection cannot be performed, please confirm that the cruise function in the entertainment display is OFF and try again.

Manual Speed Limit Vehicle Speed Setting

After the manual speed limit is enabled, the target speed limit can be set via the button on the left side of the steering wheel, as follows:

1 When the manual speed limit is turned on, the manual speed limit function enters the standby state and the

speed limit assist system indicator on the instrument pack illuminates in white; press the Pilot switch (2 below) to activate the manual speed limit function and the speed limit assist system indicator illuminates in blue. When the Pilot switch is pressed for the first time, if the actual speed is lower than 19 mph (30 km/h), the target speed limit displayed on the speed limit assist system indicator will be 19 mph (30 km/h). If the actual speed is higher than 19 mph (30 km/h), the current speed will be rounded up to the nearest multiple of 5 as the target speed limit value. The target speed limit value for the manual speed limit can then be adjusted by moving the speed adjustment knob up or down (1 below). The target speed limit value is increased or decreased by 3 mph (5 km/h) every time the lever is briefly moved upwards or downwards. The speed limit value will change continuously by 3 mph (5 km/h) when the lever is moved upwards/downwards and held.

2 When the manual speed limit is activated, the system will actively limit the vehicle from exceeding the target speed limit. When the actual vehicle speed exceeds the target speed limit set by the driver, the system will gradually reduce the vehicle speed to below the target speed limit.

3 When the manual speed limit is activated, the driver can press the Pilot switch (2 below) briefly to return the system to standby. Press the Pilot switch (2 below) again to restore the manual speed limit.

4 When the manual speed limit is activated, the speed limit value can be temporarily exceeded by pressing the accelerator pedal deeply and the speed limit assist system indicator on the instrument pack illuminates in blue and flashes.

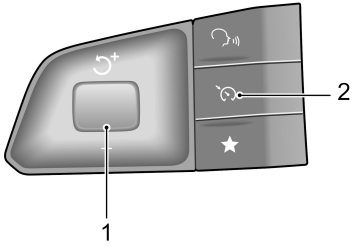

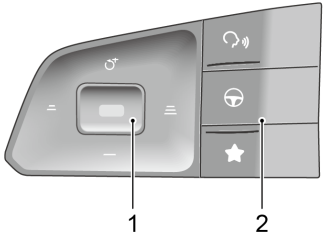

1 Adjustment Knob (1)

2 Pilot Switch (2)

Note: Long term high-speed driving and low battery SOC can cause a short-term decrease of system output power, and the system will light up the speed limit sign. At this time, the vehicle cannot reach the maximum speed. After the system drive capability is restored, the speed limit sign disappears.

When the intelligent speed limit is turned on, the speed limit function enters the standby state and the speed limit assist system indicator on the instrument pack illuminates in white; press Pilot switch (2) to activate the intelligent

speed limit function and the speed limit assist system indicator illuminates in blue. When the vehicle passes the first recognized speed limit sign, the speed limit sign speed indicator shows the real-time speed limit value. If the vehicle encounters a speed limit sign with the same speed limit value, the speed limit value in the speed limit sign speed indicator is not updated.

Note: If the vehicle changes lane, makes a turn, turns around in the intersection, or identifies the speed limit cancellation, the original speed limit value on the instrument pack may be reset and displayed as '–' till a new speed limit sign is detected. If the conditions are not met, the original speed limit value will remain and not be reset. The driver MUST observe the speed limitsand adjust the their speed accordingly.

The driver can temporarily exit the speed limit assist system by doing the following:

1 Temporarily exceed the speed limit value by pressing the accelerator pedal deeply, at which time the speed limit assist system indicator on the instrument pack illuminates in blue and the speed limit sign speed indicator flashes;

2 Short press the Pilot switch (2 above) to temporarily exit the speed limit assist system function, at which time the speed limit assist system indicator on the instrument pack turns white (dark in the daytime mode) and short press the Pilot switch again to resume the speed limit assist system function.

The intelligent speed limit may not work properly in the following cases:

1 The detection performance of front view camera is affected;

2 The vehicle is driven at a high speed;

3 The speed limit signs are blocked by the trees at the roadside, ice/frost, snows, dusts, etc; or the speed limit signs are placed improperly or damaged;

4 There are several speed limit signs set up over the road or at the roadside; Currently, the front view camera can only identify the speed limit signs for the lane the car drives on;

5 The speed limit signs set up at the forks in the road, the curves and the on-ramp/off-ramp;

6 In the scenarios such as lane-changing.

IMPORTANT

- The camera may not correctly recognise speed limit signs during poor lighting conditions, bad weather, non-standardized or sheltered speed limit signs or the camera's own restrictions which include the recognition of similar signs (e.g., recognise a weight limit sign as a speed limit sign or recognise a minimum speed sign as the maximum speed sign).
- The camera cannot identify the text provided below the speed limit sign, such as Auxiliary Lane, 100 m Ahead, School Section, 7:00-10:00 , etc. The camera will identify the speed limit sign with text as a normal speed limit sign.
- Some drastic and rapid steering operations made by the driver may be judged as changing lane or turning around in the intersection by the system, resulting in the identified speed limit signs being cleared.
- In cases where a speed limit sign contains multiple speed limits. The camera may not identify all the speed limits.

Constant Speed Cruise Control System*

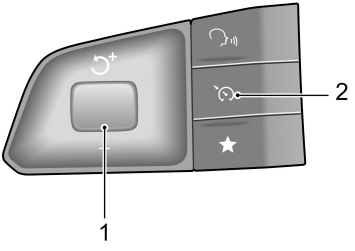

- Speed Adjustment Knob (1)
- Pilot Switch (2)

Cruise control enables the driver to maintain a constant road speed without using the accelerator pedal. This is particularly useful for motorway cruising or for any journey where a constant speed can be maintained for a lengthy period.

Cruise Control System Activation

Cruise control system is operated with the cruise switch located at the left side of the steering wheel.

1 When the Start switch is in the ON/RUNNING position and the vehicle speed is greater than 40 km/h, short press the Pilot switch (2) to activate the cruise control system quickly and the constant speed cruise control system indicator on the instrument pack illuminates in BLUE. The target speed of the cruise control system will be the actual vehicle speed at the time of activation and is displayed on the lower side of the cruise control system indicator. The cruise control system operates in the speed range of 40-180 km/h. When activated, the cruise control system controls the vehicle to maintain the target speed without applying the accelerator pedal.

2 When the cruise control system is in standby mode and the current vehicle speed is greater than 40 km/h, press the speed adjustment knob (1) to activate the cruise control system; the target speed of the system

will be the actual vehicle speed at the time of activation, which is displayed on the lower side of the cruise control system indicator.

Note: The adjustment knob can be operated in various ways such as being moved up/down or being pressed. Pressing the adjustment knob when the constant speed cruise control system is activated will update the vehicle speed to the current speed.

Target Cruise Speed Adjustment

When the cruise control is active:

Normal pressing of the accelerator pedal (e.g., overtaking) will still allow the vehicle to accelerate. When the desired speed is reached, press the speed adjustment knob (1) and the target cruise speed is updated to the current speed.

Toggle the speed adjustment knob (1) up/down and hold and the vehicle will accelerate or decelerate automatically, then release the switch when the desired speed is reached.

Alternatively, the vehicle speed can be adjusted by toggling the speed adjustment knob up/down and releasing it immediately. Each toggle will increase or decrease the vehicle speed by approximately 1 km/h.

When the cruise control system is in operation, the vehicle still can be accelerated by pressing the accelerator pedal (such as overtaking). Releasing the accelerator pedal will return the vehicle to the set cruise speed.

Pause

When the cruise control system is active, the following actions will cause the cruise control system to exit to Standby state and the cruise control system indicator on the instrument pack to illuminate in white (some models show dark color in daytime mode):

- Short press the Pilot switch (2).
- Brake pedal pressed.
- The shift lever is moved to N position.
- Poor road conditions may lead to the activation of the Stability Control System (SCS). For safety reasons, the cruise control system will automatically exit to Standby state.
- Steep slopes may cause the vehicle speed to drop or rise excessively and the cruise control system will automatically exit to Standby state.
- EPB is operated in an abnormal manner.

Resume

After paused and remained in Standby state, the cruise control system can be reactivated by toggling the speed adjustment knob (1) up once. At this moment, the target cruise speed is the target speed before exiting the cruise control system.

Note: Constant speed cruise can be re-activated only when the vehicle speed is greater than 40 km/h.

OFF

Long press the Pilot switch (2) to turn off the cruise control system.

Note:

- ***Do not use the constant speed cruise control system in unsuitable conditions, such as in rainy days, on slippery surfaces or in traffic conditions that do not allow to maintain a constant speed.***
- ***ALWAYS turn off the constant speed cruise control system when it is not in use.***
- ***When the vehicle is in 'Sport' mode, it is not recommended to use the constant speed cruise control system.***
- ***During the operation of cruise control system, the actual speed may deviate from the target speed to some extent due to control precision or road conditions.***
- ***Excessive deviation of the actual vehicle speed from the target speed due to a slope or road surface, etc. or triggering the SCS to operate may cause the cruise control system to automatically exit to the 'Standby' mode.***
- ***Do not operate the switch for excessively long periods or press multiple switches simultaneously, this may cause the system to fail. If this situation occurs, restart the vehicle.***

Lane Keeping Assist



The lane assist system is an auxiliary system that provides assistance to the driver. It does NOT remove the responsibility of safe driving from the driver. When choosing to use the lane assist system, the driver MUST always pay attention to the surroundings, hold the steering wheel and be prepared to correct or take over the steering wheel control. Failure to maintain overall control of the vehicle may result in an accident or personal injury.



The lane assist system is an auxiliary system that provides assistance to the driver. It does NOT remove the responsibility of safe driving from the driver. When choosing to use the lane assist system, the driver MUST always pay attention to the surroundings, hold the steering wheel and be prepared to correct or take control over the steering wheel. Failure to maintain overall control of the vehicle may result in an accident or personal injury.

The lane keeping assist (LKA) system switch is located on the entertainment display. The system can be turned on/off in the appropriate Driver Assistance interface and the mode can be selected.

Alert

The system detects the lane lines ahead when the following detection conditions are met:

- The function is in ON state;
- The vehicle speed is above 37 mph (60 km/h);
- The lane lines are clear and the system detects at least one lane line;

When the wheel is about to run on the lane line, the system will give warnings to remind the driver to correct the direction in time and keep the vehicle running within the lane lines. The function will exit when the speed is less than 34 mph (55 km/h).

Lane Departure Assist

The system detects the lane lines ahead when the following detection conditions are met:

- The function is in the ON state;

- The vehicle speed is above 37 mph (60 km/h);
- The lane lines are clear and the system detects at least one lane line;

If the wheel is about to run on the lane line or has already run on the lane line, the system will assist the driver in keeping the vehicle running within the lane lines by applying corrective steering intervention and by prompting. If the vehicle deviates too much from the lane line, the warning function will be triggered at the same time. The function will exit when the speed is less than 34 mph (55 km/h).

Emergency Lane Keeping

The system detects the lane lines ahead, kerbs and vehicle in the adjacent lanes when the following detection conditions are met:

- The function is in the ON state;
- The vehicle speed is above 37 mph (60 km/h);
- The lane lines or kerbs are clear and the system detects at least one lane line or kerb;

If the wheels are about to run on the line or drive onto the kerb, have already run on the line or driven onto the kerb or the vehicle has a lane departure and has a risk of collision with an oncoming vehicle or a vehicle approaching from behind on the adjacent lane, the system will assist the driver in keeping the vehicle running within the lane lines or performing emergency avoidance by applying corrective steering interventions and alerts. If the vehicle deviates too much, the lane departure warning function will be triggered at the same time. The function will exit when the speed is less than 34 mph (55 km/h).

When the system applies intervention many times in a certain period of time and monitors that the driver has kept his hands off the steering wheel, the system will give alarms.

IMPORTANT
• In cases where the number of lanes increase or lanes merge, the driver MUST take full control of the vehicle. • In areas where there are complex traffic conditions such as intersections or road junctions with congestion, the driver MUST take full control of the vehicle.

The lane keeping assist system will be limited or does not work in the following conditions:

- The driver turns on the turn signal lamps at the side across the line;
- The driver turns on the hazard warning lamps;
- The driver presses the accelerator pedal rapidly, steers sharply or presses the brake pedal deeply;
- The system recognises that the driver does not manipulate the steering wheel for a period of time;
- When the system implements the steering intervention, the driver is manipulating the steering wheel;
- The lane line is too thin, damaged or fuzzy;
- Changes in lane divisions occur, such as when lanes diverge or merge and when traveling at forks;
- The kerbs are irregular or damaged;
- The vehicle is driving on the curve with a small curvature radius or on too narrow or too wide road;
- The vehicle has just entered the road section with lanes or has passed the road section without lane lines;
- The vehicle makes a rapid lane change or lateral sway;
- The vehicle is not in Drive gear;
- The vehicle speed is less than 34 mph or the speed is too high;
- The anti-lock brake system(ABS)and the dynamic stability control system(SCS)are activated;
- The anti-lock brake system(ABS), dynamic stability control system(SCS), electric power steering system(EPS), etc. fail.
- Camera obscured or unclear(smudged, frosted), camera unable to focus, camera unable to calibrate;
- Camera failure due to weather damage to the camera's field of view caused by low sun altitude, glare, road spray, windscreen icing, rain, snow, fog, etc. or system malfunction;
- In trailer mode;
- Scenes at night and with poor auxiliary lighting;
- Entering and exiting the tunnel(too rapid a change in light intensity).

It is recommended to turn off the lane keeping assist system in the following situations:

- Driving in a 'sports' style manner;
- Drive in bad weather;
- Drive on a poor road section;

- Drive through a road construction site;

Forward Collision Assist*



The driver remains responsible for the safety of the entire driving process, even if the vehicle is equipped with a forward collision system. The driver MUST pay full attention and drive carefully. As with all the driver assist systems, the forward collision system cannot prevent accidents or avoid collisions in all situations. The driver MUST always remain in control to avoid accidents or emergency situations.



Emergency braking whilst under the control of forward collision system may cause injuries to the passengers. Therefore, drive carefully and all passengers MUST wear seat belts at all times.



Ensure forward collision system or ignition/vehicle power system is switched off when being towed. If forward collision system is enabled when the vehicle is being towed, adverse effects may affect the safety of your vehicle, the towing vehicle and the people around.



To avoid the occurrence of accidents, never specially test the functions of the forward collision system.

The forward collision assist system switch is located on the entertainment display. The system can be turned on/off in the appropriate Driver Assistance interface and the mode can be selected.

Alert

When the system detects a risk of collision between this vehicle and the vehicle ahead in this lane or pedestrians, it will give warnings to prompt the driver to slow down and keep a relatively safe distance from the vehicle ahead or pedestrians and a relatively safe speed.

The system may sound an alarm when:

- Approaching a stationary or moving vehicle at a speed greater than approx 5mph(7 km/h) and less than approx 93mph(150km/h) .
- Approaching a pedestrian or a two-wheeled vehicle at a speed greater than approx 5mph(7km/h) and less than about 52mph(85km/h) .

Alert + AEB

When the system detects a risk of collision between your vehicle and the vehicle ahead in the current lane or moving pedestrians, it will give an alarm to warn the driver. If the risk of collision further increases, the vehicle will perform an assisted brake to avoid a collision and/or mitigate the damage in the event of a collision; if the sudden risk of forward collision is high, the brake may be applied without warning. If the vehicle is braked to a stop, it will keep stationary within a short time, then the control of the vehicle will be handed over to the driver.

The system may intervene to automatically slow down the vehicle when:

- Approaching a stationary or moving vehicle at a speed greater than approx 2.5mph(4km/h) and less than approx 93km/h(150km/h) .
- Approaching a pedestrian or a two-wheeled vehicle at a speed greater than approx 2.5mph(4km/h) and less than approx 52mph(85km/h) .

The system will automatically slow down the vehicle only when the following conditions are met:

- The dynamic stability control system(SCS)and traction control system(TCS)are ON and failure-free;
- The vehicle is in Drive gear;
- The airbags are not deployed.

Note: In some cases, the driver may not have anticipated any braking intervention and does not want to apply the brakes whilst the forward collision system is braking heavily, the driver can temporarily cancel this operation by heavily pressing the accelerator pedal after ensuring that it is safe to do so.

The forward collision assist system will be limited or apply brake unnecessarily in the following conditions:

- There is oncoming traffic, the vehicle ahead drives across transversely or cuts in front suddenly;
- The vehicle ahead does not follow the rules of driving (for example, driving across lanes) and parking (on the roads transversely);
- The vehicle ahead is not on the same lane of this vehicle or is partially blocked;
- The vehicle ahead is a non-standard motor vehicle (for example, a modified vehicle);
- The vehicle ahead is a vehicle with a high chassis.
- The vehicle ahead is a large vehicle and at a close distance (such as a tractor, a trailer, a towing vehicle, a mud-carrying vehicle and a sanitation truck);
- The vehicle ahead is some means of transportation rarely can be seen on the road (such as the ox cart, carriage or others);
- The trajectory of the bicycle, motorbike or small wheeled object (such as suitcases, shopping carts or wheelchairs) ahead changes suddenly;
- The contour of the vehicle ahead is unclear due to the water sprayed by the wheels of the surrounding vehicles;
- The vehicle ahead does not turn on the tail lamps when driving at night or in the tunnel;
- The tail lamps of the vehicle ahead are all LED lamps or other home-made fairy lights;
- When driving on the boulevard, the road lamp flashes erratically;
- The pedestrian is not directly in front of the vehicle or not fully visible;
- The pedestrian does not stand upright or is a child;
- A crowd of people or the pedestrian is in the a larger object's shadow or in the dark;
- There is an animal ahead;
- There are foreign obstacles on the ground ahead (such as a roadblock, an isolation pile, an isolation strip, big rocks, other scattered objects, etc.);
- There are signs, guardrails, bridges, buildings, etc. ahead;
- The vehicle drives on a slope, the section coming on/off the bridge or curve;

- The vehicle is in Reverse gear;
- The vehicle is braking or accelerating harshly;
- When driving on a boulevard at night, the road lamp flashes erratically or the light intensity changes suddenly;
- Driving in bad weather conditions, such as rain, snow, dense fog, haze, etc.;
- Driving on roads with low adhesion coefficient that may easily trigger SCS, such as rain or covered with ice and snow;
- Driving uphill, downhill or on continuous curves, etc.;
- The front view camera is blocked by foreign matters (water vapor, frost, snow, bird droppings, etc.) at the windscreen;
- The position of the front view camera offsets due to external force.
- The trailer mode is enabled.

Rear Driving Assistance System*



The rear driving assistance function is only an aid, it is NOT a substitute for the attention of the driver. The driver must always remain in control, observe the surroundings and drive safely.



The effective recognition capabilities of the rear sensors can be limited by objects such as roadside buildings, guardrails, changes in pitch angle of the car due to heavy loading, road conditions such as bends or bumps or weather conditions such as snow and ice etc. Any of the above may trigger a false alarm.



The rear driving assistance system may not provide adequate warning of very fast approaching vehicles or operate correctly on tight curves of radius.



The rear driving assistance system will not operate correctly whilst towing a trailer or caravan.



The correct operation of the radar sensors will be compromised if they are misaligned due to damage caused in an accident. This may cause the system to automatically shutdown.



The correct operation of the radar sensors will be compromised if they are misaligned due to accident damage. This may cause the system to automatically shutdown.



To ensure that the radar sensors work correctly, the rear bumper should be kept free of snow and ice and must not be covered.



Use of non recommended materials or paint on rear bumper repairs may have a detrimental effect on the operation of the rear sensors. Please only use recommended materials.

The rear bumper is only allowed to use the automotive paint approved by SAIC Motor, otherwise the system function may be limited or defective.

Turning On/Off the System

The rearward driver assistance (RDA) system switch is a soft key on the entertainment display and the system or its subsystem can be turned on/off on the setting interface of the RDA system.

Blind Spot Assist

Brief Introduction to Functions

The blind spot assist includes two active safety assist functions, Blind Spot Detection(BSD)and Lane Change Assist(LCA), which are intended to alarm the driver, vehicles at the oblique rear and side of your vehicle, providing assistance in multi-lane co-direction traffic conditions.

The Blind Spot Detection(BSD)alarms the vehicles in the blind spot of your vehicle(1); the Lane Change Assist(LCA)alarms the vehicles approaching quickly with a potential collision risk in the adjacent lanes(2).

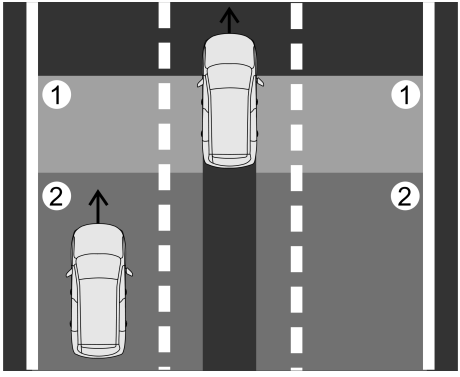

Alarm Mode



When driving at a speed over 10 mph(15 km/h, the system will detects a vehicle running in the blind spot of the rearview mirror of your vehicle or a vehicle approaching behind the adjacent lane, the warning lamp at the corresponding side will illuminate. If the direction indicator lamp at the same side is turned on, the warning lamp will flash, warning the driver that it is dangerous to continue changing lanes.

Note: The warning lamps will not illuminate whilst you are overtaking another vehicle and your speed is greater than that of the vehicle you are passing, even though it is in the blind zone.

Rear Cross Traffic Assist

Brief Introduction to Functions

The rear cross traffic assist includes Rear Cross Traffic Aler(RCTA)and Rear Cross Traffic Brake(RCTB).

During reversing, the Rear Cross Traffic Alert(RCTA)monitors the vehicles approaching from the left, right and rear of your vehicle through a sensor and gives alarms when there is a risk in reversing. The Rear Cross Traffic Brake(RCTB)is an extended function of Rear Cross Traffic Alert(RCTA). In addition to giving alarms, the system will perform an emergency brake to avoid the risk of collision if the driver fails to take safety measures.

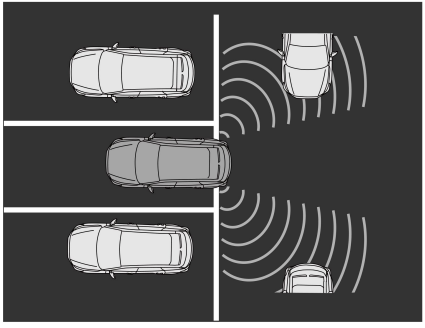

Alarm Mode



When there is a risk in reversing, the warning lamp at the corresponding side will illuminate, the system has an alarm tone. If the driver fails to take safety measures, the system will perform emergency brake.

Rearward Collision Warning

Brief Introduction to Functions

When driving, if other vehicles are approaching your vehicle at an alarming rate (in the same lane), the Rearward Collision Warning(RCW), will alarm the driver that a risk is approaching and will operate the hazard lamps to warn the vehicles at the rear.

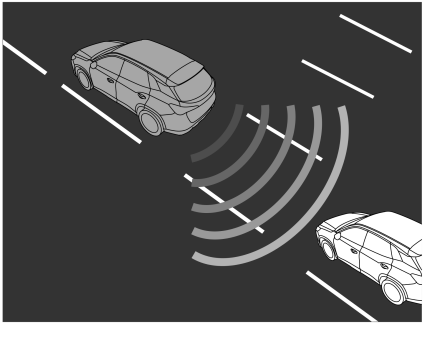

Alarm Mode

In the event of a collision risk, the rear direction indicator lamp of your vehicle will flash to warn the drivers behind.

Door Open Warning

Brief Introduction to Functions

When the vehicle is stationary, the Door Open Warning(DOW)will monitor vehicles, bicycle/motorcycle riders and/or pedestrians etc, which are approaching your vehicle from behind. Utilising a sensor at the rear side of the vehicle, an alarm will be raised when a potential risk is detected to protect you from opening the door to avoid any risk of damage from occuring or injury to other road/traffic users.

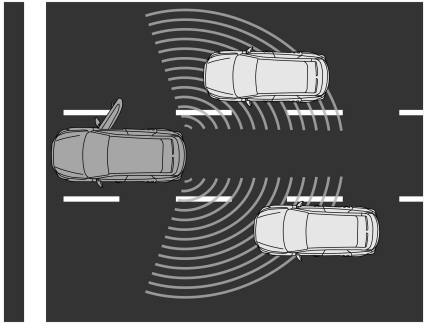

Alarm Mode



In the event of a collision risk, the warning lamp at the corresponding side will illuminate. In this case, if the door opening action continues, the warning lamp will flash with an acoustic alarm.

Ultrasonic Sensor Parking Assist

Ultrasonic Sensor Parking Assist



The purpose of the parking assist system is only to assist the driver during parking! The ultrasonic sensors may not be able to detect certain types of obstruction, e.g. narrow posts, small objects close to the ground, objects above the tailgate and some objects with nonreflective surfaces.



Keep the ultrasonic sensors free of dirt, ice and snow. If deposits build up on the surface of an ultrasonic sensor, its performance may be impaired. When washing the car, avoid aiming high pressure water jets directly at the ultrasonic sensors from close range.

Rear Parking Assist

The ultrasonic sensors on the rear bumper monitor the area behind the vehicle to search for obstacles. If an obstacle is detected, the system will calculate its distance from the rear of the vehicle and communicates the message to the driver by sounding warning chimes.

Front Parking Assist*

Some models also have ultrasonic sensors equipped on the front bumper to monitor the area ahead of the vehicle to search for obstacles. If an obstacle is detected, the system calculates its distance from the front of the vehicle and transmits the message to the driver with an audible alarm.

Parking Assist Switch*

The parking assist switch is on the entertainment display, by which the parking assist can be turned on/off manually.

When the shift lever is in the R position, the parking assist can not be turned off.

Parking Assist Operation

Rear Parking Assist

The rear parking assist is enabled automatically when the R gear is selected; and when it is moved out of the R gear, the system will immediately turn off. A short beep is given by the parking assist after selecting R gear to indicate that

the system is operating normally. If an obstacle is detected at the rear, the system will prompt the driver with warning alarms.

Note: A fault within the system can be indicated by a longer, higher pitched sound being emitted for 3 seconds when the R gear has been selected.

Front and Rear Parking Assist*

The front and rear parking assist can be enabled by the following operations:

- Select R gear;
- Turn on the parking assist switch.

The front and rear parking assist can be switched off by the following operations:

- Move the shift lever to P gear;
- Vehicle speed exceeds 9 mph (15km/h).
- Select to turn off the front and rear parking assist switch.

With the parking assist function enabled, if an obstacle is detected, audible sounds in different frequencies will be transmitted (there may be blind zones).

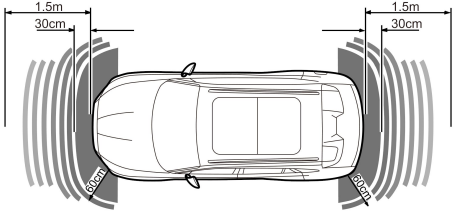

- If an obstacle is located within 1.5 m range of the rear sensor or within 60 cm range of the corner sensor, the warning sound commences. As the car moves closer to the obstacle, the warning sounds are transmitted at a higher frequency.
- If an obstacle is detected within 1.5 m in the front or within 60 cm at the corner, the warning sound will commence. As the car moves closer to the obstacle, the warning sounds are transmitted at a higher frequency.

- Once the obstacle is within 30 cm range of the front or rear bumper, the warning sounds will merge into a continuous warning.

Reversing Assist System*

The purpose of the parking camera system is to assist the driver during parking! The camera has a limited field of view and cannot detect obstructions outside the field of view.

Some models have a parking camera fitted between left and right license plate lamps on the tailgate. When R gear is selected, the camera will display an image of what is immediately behind the vehicle. This image will be shown on the entertainment display.

When there is a malfunction or abnormality in the Reversing Assist System, the display may indicate the following messages:

- Parking radar failure.
- Rear parking radar failure.
- Camera System failure.

360 Around View Monitor*

The purpose of the 360 around view system is to assist the driver during parking! The cameras have a limited field of view and cannot detect obstructions outside the field of view.

Although the infotainment display can provide images around the vehicle, please still pay attention to the current actual road conditions for your driving safety.

With the 360 around view monitor (AVM) system in operation, the entertainment display interface will show a 360 around view of the vehicle to facilitate the observation of the surrounding environment and make the driving environment much safer. You can touch buttons on the display to view images from different perspectives around the vehicle.

You can enter the 360 around view monitor (AVM) system by the following operations:

- Select R gear.
- Click the 360 switch.
- Set options such as 'Illuminate turn signal lamps at low speed' and 'Turn on AVM at vehicle start', etc. through the entertainment display (specific function name and function items are subject to the entertainment display). When the enabling conditions are met, the 360 around view monitor (AVM) system automatically turns on.

When there is a malfunction or abnormality in the 360 around view system, the display may indicate the following messages:

- Parking radar failure.
- Rear parking radar failure.
- Camera System failure.

Note: When the vehicle speed is greater than the set value, the 360 around view monitor (AVM) system will be exited automatically.

Note: 部分车型可在娱乐显示屏中设置自动退出全景影像的车速值，具体请参考娱乐显示屏。

Dynamic Transparent Chassis*

The dynamic transparent chassis function is to take the road surface image collected by the cameras in advance when the vehicle is in operation and present a transparent effect technical processing and then transmit the information to the entertainment display, so that it is

convenient for the driver to see the road surface condition in the vehicle.

Note: The dynamic transparent chassis does not recognise changes that may occur in the environment underneath the vehicle when it is stationary. Please drive carefully when using it, subject to the actual environment, so as not to cause damage to the vehicle.

Driver Monitoring System

The driver monitoring system is only an auxiliary driving tool. In any situation, the driver should be responsible for the safety of the vehicle. Fatigue and distracted driving are strictly prohibited and it is necessary to always concentrate and drive cautiously.

The driver monitoring system camera is located on the A pillar trim panel.

Note: Do not obstruct the camera area, otherwise the system will not function properly.

Note:

- ***Please check and keep the camera clean and unobstructed to ensure that the monitoring system is working properly;***
- ***Prohibit the use of abrasive or sharp objects to clean the camera;***
- ***Prohibit tapping the camera.***

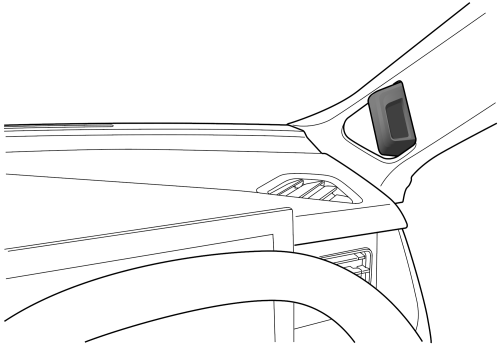

The driver monitoring system can identify the driver states such as fatigue and distraction through the camera and warn the driver based on the identified level of fatigue and distraction.

The driver monitoring system can be set in the entertainment display.

Note: The driver monitoring system identifies fatigue and distraction mainly based on yawning and closed eyes.

Note: The system may issue a fatigue reminder only when the vehicle speed is above 5 mph (8 km/h); it may issue a distraction reminder only when the vehicle speed is above 9 mph (15 km/h).

Road Emergency Response

Hazard Warning Devices	*304*
Jump Start	*305*
*eCall-SOS Emergency Assistance**	*308*
Vehicle Recovery	*310*
*Wheel Replacement**	*313*
*Tyre Repair**	*318*

Hazard Warning Devices

Warning Triangle

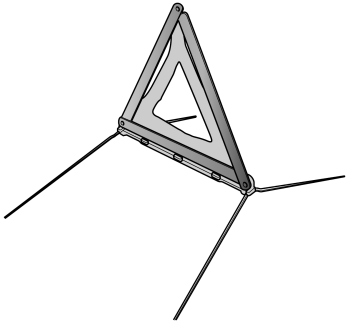

The warning triangle is stowed in the loadspace, you can take it after lifting the loadspace carpet.

If you have to stop your car on the road in an emergency, you must place a warning triangle approximately 50 ~ 150 metres behind the car, if possible and press the hazard warning lamp button to warn other road users of your position.

Jump Start

NEVER attempt to power the vehicle by pushing or towing.

Make sure that both batteries are of the same rated voltage (12 volts) and that the booster cables are approved for use with 12 volt car batteries.

Ensure sparks and open flames are kept well away from the front compartment.

Ensure that booster cables are firmly connected and do not touch each other or other moving parts, otherwise, sparks may be caused, resulting in a fire or explosion.

In case of a low battery, the vehicle can be started by using a booster cable to connect the battery of another vehicle or connecting the battery externally.

Type A- Battery within the loadspace

During jump starting, use the positive battery terminal as the positive jumping point when the tailgate can be opened. If the tailgate cannot be opened, open the front compartment fuse box and the terminal as shown can be used as the positive jumping point.

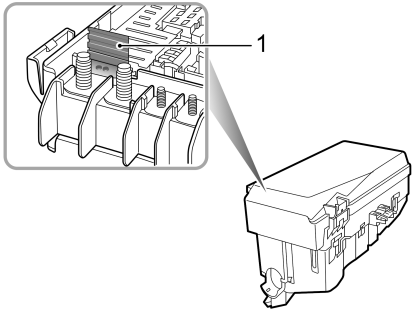

1. Positive Jumping Point

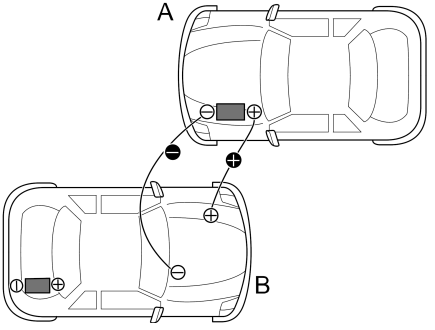

Type B- The battery in the front compartment

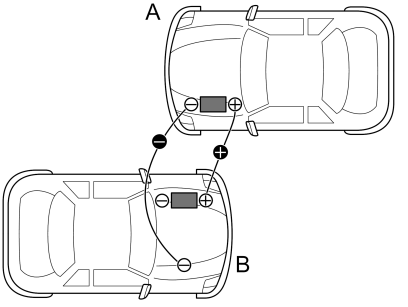

Turn off the Start switch and all electrical appliances of the vehicle and follow the instructions below:

1 Connect the red jumper cable from the positive (+) terminal of the power supply vehicle (A) to the positive (+) terminal of the low voltage vehicle (B) (type A) or the positive (+) terminal of the battery (type B). Connect the black booster cable from the negative (-) terminal of the donor battery (A) to a good earth

point (an engine mounting or unpainted surface, for example) on the disabled vehicle (B) and try to keep it well away from the battery and bypass the fuel and brake lines.

2 Start the donor vehicle and allow it to idle for several minutes.

3 Start the disabled vehicle. If the disabled vehicle will not start after several attempts, it may need to be repaired. Please contact an MG Authorised Repairer for an overhaul.

4 After both vehicles are started normally, turn off the Start switch of the donor vehicle.

5 Disconnect the booster cables. Disconnecting the booster cables must be an exact reversal of the procedure used to connect them, i.e. disconnect the black negative cable from the earth point on the disabled vehicle FIRST.

IMPORTANT
Do Not open any electrical appliances of the vehicle with low power before dismantling the jumper cable.

Note: It is recommended to turn off the lights, air conditioner and other comfort appliances after starting the vehicle with power loss and keep the vehicle running for 1~2 hours to restore the battery power. If the battery is fully charged and the vehicle still cannot be normally started, please contact an MG Authorised Repairer for service.

eCall-SOS Emergency Assistance*

The eCall-SOS service is a public service of general interest and is accessible free of charge. The emergency call centre will establish verbal communication with the vehicle occupants in order to understand the extent of the emergency and the level of assistance required. The following vehicle information will be transmitted to the emergency call centre so that appropriate emergency services can be deployed based on the location of the vehicle.

- Current time, location and direction of travel
- Vehicle fuel type
- Vehicle identification number (VIN)
- Whether the call was automatically or manually initiated
- Vehicle category
- Number of occupants

This system will ensure that your personal data is securely protected. It is designed to ensure that it is not traceable and other external systems are not able to gain access. When the eCall is triggered, the system will only transmit the data information to the relevant public safety answering points designated by the respective public authorities of the country on which territory they are located, which will receive and process your emergency call request. The system will retain data locally within 13 hours of triggering.

You have the right to access the data information stored in this system and to request the rectification, erasure or blocking of data information that does not meet the requirements of the regulations. When you think your personal data is infringed, you have the right to complain to the competent data protection authority.

In an accident, your vehicle's eCall-SOS Emergency Assistance can either be triggered manually or in severe cases automatically upon detection by vehicle's sensors. Press the SOS button in the overhead console for 1 second to manually activate an emergency services call. A single beep will be heard when the eCall is triggered and a message will be displayed on the vehicle's instrument pack and entertainment system. The entertainment system will be muted whilst the emergency services call is active. Manually triggered emergency services calls may be cancelled by pressing and releasing the SOS button again within 5 seconds of the initial press.

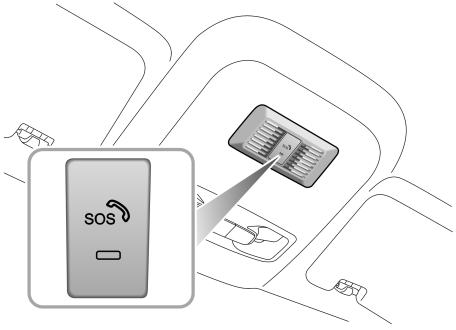



The emergency call (eCall) system will perform a self-test when the Start switch is in the 'ON/RUNNING/READY' position. The LED status indicator on SOS button will illuminate if no system faults are present. The LED status indicator will be extinguished or remain ON after flashing slowly if a fault is detected. A corresponding fault message will be displayed on the instrument pack.

Note: The eCall–SOS emergency call feature relies on cellular network coverage and the location of the vehicle may affect the proper use of the feature.

Vehicle Recovery

Vehicle Towing

DO NOT tow the vehicle with any of the driving wheels in contact with the road surface, this will avoid electric drive unit damage. If pushing the vehicle is required in some cases, the speed shall be less than 3 mph (5 km/h) and the duration shall be less than 3 minutes.

When pushing or towing the vehicle for temporary situation, the locking tab of the driver seat belt should be inserted into the buckle and maintained in the inserted state, then turn the shift knob to N and release the EPB , otherwise the vehicle may be damaged.

Towing hook

DO NOT use a tow rope that is twisted - or the towing hook may be unscrewed.

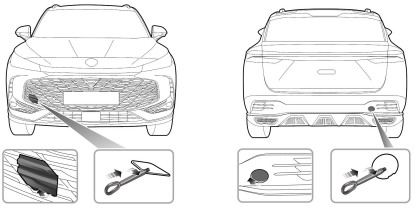

Your vehicle is equipped with 2 towing eyes (located at the front and the rear of the vehicle), which are used for fitting the towing hook in the tool kit. The tool kit is placed beneath the loadspace carpet. To fit the towing hook, remove the small cover from the bumper. During removal, press the left side of the front small cover so that it tilts up and then remove it in the direction as shown. The rear small cover can be opened by prying in the direction as shown. Then screw the towing hook via the small hole into the threaded hole in the bumper beam (see illustration). Ensure the towing hook is fully tightened!

Note: The removable cover is secured to the bumper by a plastic cord.

The towing hooks can be used as the towing point to tow your vehicle when a breakdown or accident occurs. But they are not designed for towing other vehicles. The vehicle can be towed using a tow rope but a towing bar is recommended.

Towing

When towing, DO NOT accelerate or brake suddenly, this can cause accidents.

Suspended Towing

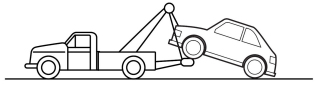

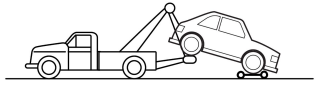

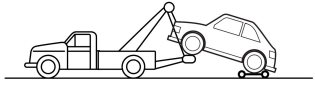

Suspended towing is the best method for recovering a vehicle that needs to be towed. The drive wheels should be suspended above the ground or the transmission may be damaged. And release the parking brake, turn on the hazard warning lamp, with no passenger left in the vehicle.

Vehicle Transport

If your vehicle needs to be transported , a special transporter is recommended. Secure the vehicle on the transporter as follows:

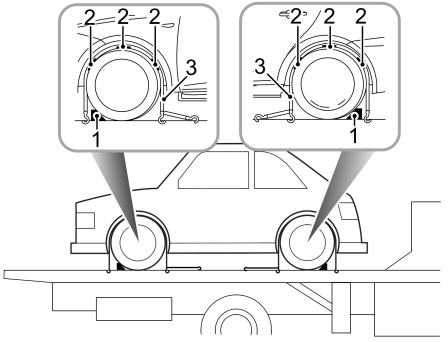

1 Apply the parking brake and place the shift lever of transmission in P position.

2 Fit wheel chocks (1) as shown, then position the anti slip rubber blocks (2) around the circumference of the tyre.

3 Fit the lashing straps (3) around the wheels and secure to the trailer. Tighten the straps until the vehicle is securely held.

Wheel Replacement*

Spare Wheel

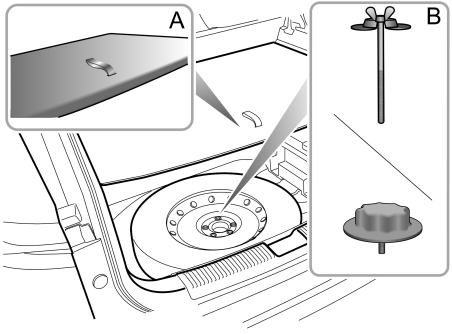

The spare wheel and tools can be removed as follows:

Note: The vehicle is equipped with spacesaver spare wheel.

1 Lift the carpet in the loadspace with the lifting strap (A).

2 Take out jack etc. from the carpet support plate.

3 Fold down the rear seats and remove the carpet support plate.

4 Disconnect the negative battery cable and the loadspace speaker harness connector (if equipped), unscrew the spare wheel retaining bolt (B) and take out the spare wheel from the loadspace.

Tool identification

The tools are arranged in the carpet support plate, as shown in the following figure :

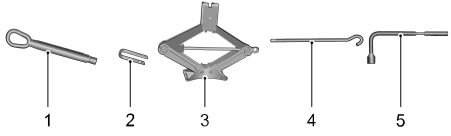

1 Towing hook

2 Wheel bolt cap removal tool

3 Lifting jack

4 Jack handle

5 Wheel wrench

Wheel Replacement

If you need to change the wheel during the journey, choose a safe place to stop away from the main road if possible. Always ask your passengers to get out of the car and wait in a safe area away from other traffic.

Turn on hazard warning lamps and wear a reflective vest. If available, position a warning triangle about 50 ~ 150 metres behind your vehicle to warn approaching traffic.

Before changing a wheel, ensure the front wheels are in the straight ahead position. Apply the parking brake and put the vehicle into P gear. Place the Start switch in the OFF position.

Positioning the Jack

DO NOT work underneath the car with a wheel changing jack as the only means of support. The jack is designed for wheel changing only!

NEVER jack the car using any positions other than the jacking points, otherwise serious damage may be caused.

Avoid any damages to the underbody parts, especially hot exhaust system components.

Position the jack on firm level ground under the jacking point nearest to the wheel which is being removed. Turn the jack screw handle by hand, adjust the jack until the jack head fits snugly onto jacking point of the body.

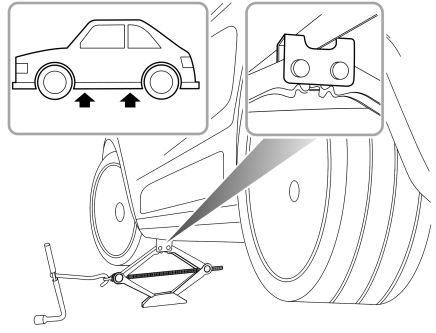

Ensure that the base of the jack is in full contact with the level ground.

IMPORTANT
• Ensure the jack is positioned on firm, level ground. • If the vehicle must be parked on the hill, place chocks in front of and behind the other 3 wheels to prevent the vehicle moving.

Fitting the Spare Wheel

Regularly check the spare wheel tyre pressure, it may have lost pressure due to being unused for long periods of time. Always check the tyre pressure after changing a wheel.

The wheel bolts must be tightened to the specified torque after changing a wheel (120 ~ 130 Nm).

1 Before raising the car, use the vehicle tool to remove each wheel bolt cap. Use the wheel bolt spanner to slacken each bolt half a turn anti-clockwise.

2 Turn the handle in a clockwise direction until the tyre is clear of the ground.

Note: For your safety, place the spare tyre under the body flange near the jack and avoid placing wheels face down on the ground - facing the other way may scratch and damage the surface of the wheel.

3 Remove the wheel bolts and store them in a safe place to prevent them from being lost. Make sure the vehicle is steady and there is no risk of slip or movement before removing wheel bolts.

4 Pull out the wheel and place it flatwise.

Note: Place the removed wheel under the body flange near the jack and avoid placing wheels face down on the ground - facing the other way may scratch and damage the surface of the wheel.

5 Fit the spare wheel and tighten the wheel bolts until the wheel is seated firmly against the hub.

6 Lower the vehicle and remove the jack, then FULLY tighten the wheel bolts in a diagonal sequence.

7 Place the tools back and put the replaced wheel into the loadspace where the spare wheel was located.

Note: DO NOT stand on the handle of the wheel bolt spanner or use extension tube on the handle of the spanner.

Note: When replacing the wheel, please fully tighten the bolts in the diagonal sequence twice.

Note: Consult an MG Authorised Repairer or tyre specialist for a replacement tyre as soon as possible.

Spacesaver Spare Wheel



Only one spacesaver spare wheel can be used at any one time, otherwise the operational performance and brake performance may be reduced, thereby leading to an accident or injury to yourself and others.



When driving on snow covered or icy roads, it is advised to fit the spacesaver wheel to the rear wheels of the vehicle to maintain adequate stability. If the front wheel tyre is damaged, a rear wheel should be moved to the position of a front wheel and then fit the spacesaver spare wheel in the position of the rear wheel.



Snow chains can not be used on the spacesaver spare wheel, this can cause damage to the car and snow chain.

When the spacesaver spare wheel is fitted, drive the car with care and ensure the speed does not exceed 50 mph (80 km/h). Please have the full-scale tyre repaired and replace the spare wheel as soon as possible. This will extend the life span of the spare wheel for other emergencies.

Note: DO NOT use an automatic car wash when the spacesaver wheel is fitted, the guide rails of the car wash may conflict with the wheel/tyre and cause damage.

Tyre Repair*

Tyre Repair Tool

The tyre repair tool is placed under the loadspace carpet and can be removed from the carpet support plate by lifting the loadspace carpet with the lifting strap.

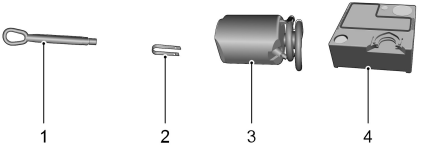

1 Towing Hook

2 Wheel Bolt Cap Removal Clamp

3 Repair Fluid

4 Electric Air Pump

Tyre Repair

1 Remove the label at the bottom of the repair fluid reservoir and attach it to the steering wheel to remind the driver not to exceed 50 mph (80 km/h).

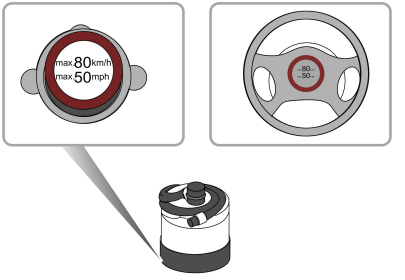

2 Connect the air hose of the electric air pump to the repair fluid reservoir. Invert the repair fluid reservoir on the groove of the electric air pump. Remove the valve dust cap of the damaged tyre and connect the hose connector of the repair fluid reservoir to the tyre valve. Ensure that the power switch of the electric air pump is switched off (i.e., press ' o '), then connect the electric air pump plug to 12 V power socket and turn the vehicle power system on.

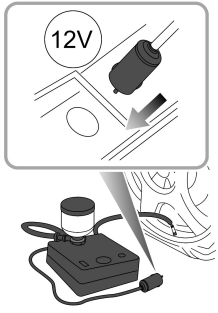

Note: To avoid battery overdischarge, please start the vehicle.

3 Switch on the power switch of the electric air pump (i.e., press ' - '), to start pumping sealant into the tyre. The repair fluid reservoir will become empty after approximately 30 seconds. The tyre should reach the specified pressure within 5 or 10 minutes.

Note: When the pressure gauge of the air pump starts to work, it may briefly indicate up to 600 kPa (i.e. 6 bar), then the pressure will return to normal.

4 When the required pressure is reached, switch off the electric air pump (i.e., press ' o ').

Note: If the required pressure cannot be reached within 10 minutes, please disconnect the compressor, drive the vehicle 10 metres approx forward or backward to allow the sealant to spread within the tyre. If the required pressure is still not reached, the tyre is severely damaged and you should seek assistance from the Roadside Assistance company or an MG Authorised Repairer.

Note: Consecutive operation of electric air pump for more than 10 minutes may result in damage to the compressor.

5 Remove the repair fluid reservoir from the slot and disconnect the hose of the reservoir from the tyre valve. Then remove the plug of the electric air pump from the 12V power socket and return the tyre repair kit to its stowage tray.

6 Please drive the car within 1 minute upon the completion of above operations to allow the sealant to distribute evenly in the tyre, the vehicle speed must not exceed 50 mph (80 km/h) and the driving mileage must not exceed 3 miles (5 km). Find a safe place to stop and recheck the tyre pressure.

If the tyre pressure has dropped to less than 80 kPa (0.8 bar), it indicates that the tyre is severely damaged and unrepairable, please contact a local MG Authorised Repairer for service.

If the tyre pressure is between 80 kPa (0.8 bar) and the specified pressure, inflate the tyre with the electric air pump until it reaches the specified pressure. Repeat Step 6.

If the tyre pressure is equal to the specified pressure, you may continue driving. Please ensure the vehicle speed does not exceed 50 mph (80km/h) and the driving mileage does not exceed 124 miles (200km).

Note: The tyre repair kit is only applicable to tyre damage caused by the pins with a diameter no more than 6 mm, and only the tread as shown in Figure A can be repaired, but not when the damage is in arears as shown in Figure B.

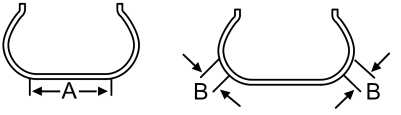

Maintenance

Maintenance Description 322
Bonnet 326
Engine Compartment 327
Engine Oil 331
Cooling System 334
Catalytic Converter 335
Brake Friction Pair and Brake Fluid 337
Fuse Replacement 339
12V Battery Maintenance and Replacement 347
Bulb Replacement 349
*High-voltage Battery Pack** 350
Washer 353
Wipers 356
Tyres 360
Cleaning and Care 366

Maintenance Description

Regular Maintenance

The safety, reliability and performance of your vehicle will depend partly on how well it is maintained. You must ensure that maintenance is carried out when required and according to the information contained in the 'Warranty and Maintenance Handbook'.

Maintenance

After the completion of each maintenance, the next maintenance information will be reset by our company Authorised Repairer.

Note: If the maintenance is not carried out (or the display is not reset by an Authorised Repairer after maintenance), the maintenance display will not be able to provide correct information.

Maintenance History

After each maintenance, always ask your Authorised Dealer to register the maintenance.

Fluid

Please use fluids recommended and approved by our company. Refer to 'Recommended Fluids and Capacities' in the 'Technical Data' chapter.

IMPORTANT
Use of fluids or additives unsuitable for this vehicle may damage parts or equipment, please consult an Authorised Repairer for details.

Emission Control

Your car is fitted with exhaust emission and evaporative control equipment designed to meet specific territorial and legal requirements. Incorrect engine settings may adversely affect exhaust emissions, engine performance and fuel consumption, as well as causing high temperatures, which could result in damage to the catalytic converters and engine.

IMPORTANT
You should be aware that unauthorized replacement, modification or tampering with this equipment by an owner or motor vehicle repairer could result in the manufacturer's warranty being deemed as invalid. In addition, no adjustment can be made to the engine settings. Otherwise, the vehicle emission indexes could be affected.

Owner Maintenance

Any significant or sudden drop in fluid levels or uneven tyre wear, should be reported without delay to an Authorised Repairer.

In addition to the maintenance referred to previously, some simple checks must be carried out more frequently.

Daily Check

- Operation of lights, horn, wipers, washers and warning lights.
- Operation of seat belts and brakes.
- Look for fluid deposits underneath the car that might indicate a leak.
- Check tyre appearance.

Weekly Check

- Engine oil level.
- Coolant level.
- Brake fluid level.
- Windscreen washer fluid level.
- Tyre pressure.
- Operate air conditioning.

Note: The engine oil level should be checked more frequently if the car is driven for prolonged periods at high speeds.

Special Operating Conditions

If your vehicle is frequently used in dusty conditions or operated in extreme climates where sub-zero or very high ambient temperatures are normal, more frequent attention may need to be paid to maintenance requirements. You need to carry out special maintenance operations (refer to Warranty and Maintenance Handbook or contact your Authorised Repairer).

Safety in the Garage



Cooling fans may commence operating after the engine is switched off and continue operating for a number of minutes. Keep clear of all fans while working in the engine compartment.

If you need to carry out maintenance, observe the following safety precautions at all times:

- Keep your hands and clothing away from drive belts and pulleys.
- If the car has been driven recently, DO NOT TOUCH exhaust and cooling system components until the engine has cooled.
- DO NOT TOUCH electrical leads or components while the engine is running or with the Start switch on.
- NEVER leave the engine running in an unventilated area - exhaust gases are poisonous and harmful to heath.
- DO NOT work underneath the vehicle with a jack as the means of support.
- Ensure that sparks and naked lights are far away from the engine compartment.
- Wear protective clothing and work gloves.
- Remove watches and jewelry before working in the engine compartment.
- DO NOT allow tools or metal parts of the vehicle to make contact with the battery leads or terminals.

Toxic Fluids

Fluids used in the vehicle are poisonous and shall not be swallowed or brought into contact with open wounds. These include: battery acid, coolant, brake and power steering fluid, fuel, engine oil and windscreen washer fluid.

For your own safety, ALWAYS read and obey all instructions on labels and containers.

Used Engine Oil

Prolonged contact with engine oil may cause serious skin disorders, such as dermatitis and cancer of the skin. Wash thoroughly after contact. Used engine oil should be disposed of correctly. Incorrect disposal can cause a threat to the environment.

Bonnet

Opening the Bonnet

DO NOT drive when the bonnet is not closed or retained only by the safety catch.

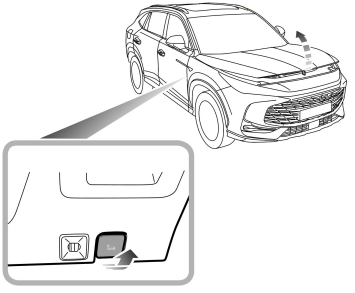

1 Pull the bonnet opening handle from inside the vehicle 2 consecutive times.

2 Raise the bonnet to open it.

Closing the Bonnet

Hold the bonnet using both hands and lower it, When the bonnet drops for about the last 20 ~ 30 cm to the lock position, apply a downward force to fully close the bonnet.

By attempting to lift the front edge of the bonnet, check if the lock is fully engaged after closing the bonnet. If it is not fully engaged, you must repeat the operation.

Bonnet Open Alarm

If the bonnet is not fully engaged, when the vehicle is in the ACC/ON/RUNNING/READY state, the corresponding alarm icon will be displayed in the message centre display. If it is found that the bonnet is not fully locked while driving, an audible warning will sound.

Engine Compartment

While working on parts inside the front compartment, always observe the safety precautions listed in 'Safety in the Garage'. Refer to 'Maintenance' in this section.

Front Compartment - 2.0T

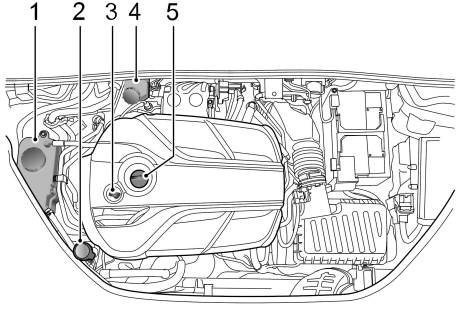

1 Coolant expansion tank
2 Washer fluid reservoir
3 Oil dipstick
4 Brake fluid reservoir
5 Oil filler cap

Front Compartment - 1.5T

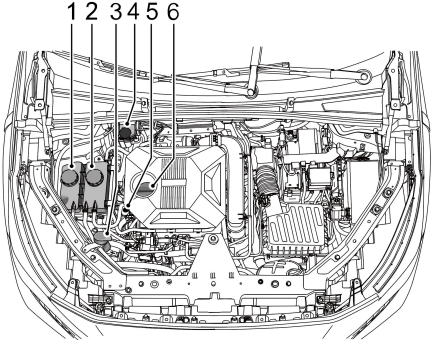

1 Water-cooled intercooler coolant expansion tank
2 Engine coolant expansion tank
3 Washer fluid reservoir
4 Brake fluid reservoir
5 Oil dipstick
6 Oil filler cap

Front Compartment - 1.5T PHEV

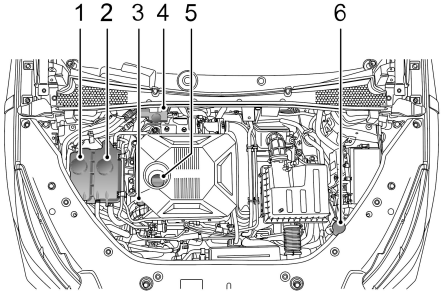

1 Water-cooled intercooler coolant expansion tank
2 Engine coolant expansion tank
3 Oil dipstick
4 Brake fluid reservoir
5 Oil filler cap
6 Washer fluid reservoir

Front Compartment - HYBRID+

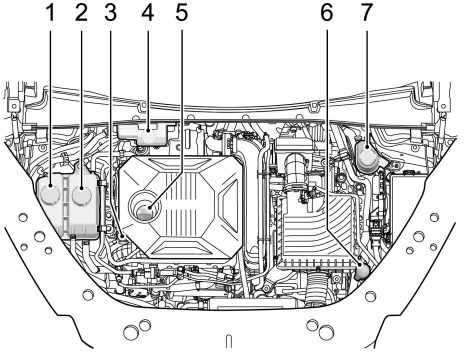

1 Engine Intercooler Coolant Expansion Tank
2 Engine Coolant Expansion Tank
3 Oil Dipstick
4 Brake Fluid Reservoir
5 Oil Filler Cap
6 Washer Fluid Reservoir
7 High Voltage Battery Pack Coolant Tank

Engine Oil

Engine Oil

ACEA/API Classification of Engine Oil

The European Automobile Manufacturers Association (ACEA) and the American Petroleum Institute (API) classify the engine oils based on their performance and quality. To ensure the best performance of the vehicle, please use 0W-20 engine oil recommended by SAIC Motor that complies with ACEA C5 and API SP specifications. 0W-20 engine oil is suitable for low temperature and normal temperature environments and is all-purpose engine oil for all seasons.

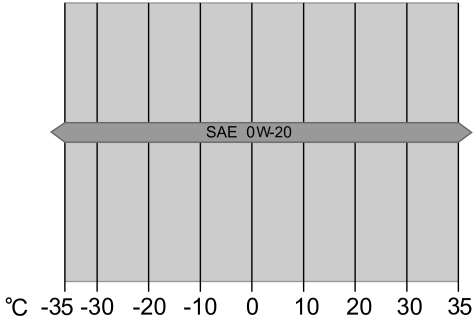

IMPORTANT
Do not allow the engine to run at low coolant temperature for a long time. If you have made several short drives and have not reached normal engine operating temperature each time, please extend the engine running time to bring the engine up to normal operating temperature.

Engine Oil Check and Refill

Driving the vehicle with the engine oil level ABOVE the upper mark or BELOW the lower mark on the dipstick, will damage the engine.

Do not spill engine oil onto a hot engine, otherwise it may cause a fire.



A

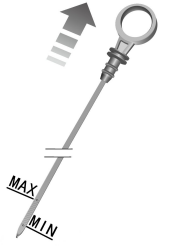

B

A: 1.5T B: 2.0T

Check the oil level weekly and refill as necessary. Ideally, the oil level should be checked with the engine cold and the car resting on a level ground. If the engine is running and already getting warm, wait for at least five minutes after switching off the Start switch before checking the oil level.

1 Withdraw the dipstick and wipe off the oil on it.

2 Slowly insert the oil dipstick and pull it out again to check the oil level; the oil level shall not be lower than the ' MIN ' mark on the oil dipstick.

3 Unscrew the engine oil filler cap and refill the oil to maintain the oil level between the ' MAX ' mark and ' MIN ' mark on the oil dipstick.

4 Wait for 5 minutes and then recheck the oil level, add an appropriate amount of oil if necessary - DO NOT OVERFILL!

5 Finally, ensure the dipstick is inserted and oil filler cap is fully secured.

Engine Oil Specification

Use the engine oil recommended and certified by our company. Refer to 'Recommended Fluids and Capacities' in the 'Technical Data' chapter.

Note: Any engine misfire, loss of engine performance or engine run-on, could seriously damage the catalytic converter and particulate filter. Regular maintenance must be carried out in accordance with the maintenance schedule specified by the manufacturer. Any modifications to the engine without manufacturer authorisation is prohibited.

IMPORTANT
Check the engine oil level more frequently if the vehicle is driven at high speeds for prolonged periods.

Cooling System

Coolant Check and Top Up



Do not unscrew the coolant expansion tank cap when the cooling system is hot - escaping steam or hot coolant could cause serious injury.

It is recommended that the cooling system should be checked weekly when the cooling system is cold and with the vehicle resting on a level ground. If the coolant level is below ' MIN ' mark, remove the coolant expansion tank cap and add coolant, but the level shall not be higher than ' MAX ' mark.

Prevent coolant from coming into contact with the vehicle body when topping up. Coolant will damage paint.

If the coolant level falls appreciably during a short period, which is suspected to have leakage, please go to an MG Authorised Repairer for service in time.

Coolant Specification



Coolant is poisonous and can be fatal if swallowed - keep the coolant reservoir sealed and out of the reach of children. If accidental contact of coolant by children is suspected, seek medical assistance immediately.



Prevent the coolant coming into contact with the skin or eyes. If this occurs, rinse immediately with plenty of water. If eyes are still red, painful or uncomfortable, seek medical attention immediately.

Please use the coolant recommended and certified by the manufacturer. Refer to 'Recommended Fluids and Capacities' in "Technical Data" chapter.

Note: The addition of corrosion inhibitors or other additives to the cooling system of this car may severely disrupt the efficiency of the system and cause parts damage. You are recommended to use the additives certified by the manufacturer, please consult an MG Authorised Repairer for details.

Catalytic Converter

Bottom protection layer

The bottom of the car is coated with special durable protective materials, which can prevent damage from chemical and mechanical factors. However, since damage to the protective layer is unavoidable during use, it is recommended to regularly inspect the protection layer of the car's bottom and chassis, preferably once before and once after the cold season.



The temperatures of exhaust systems that contain particulate filters and catalytic converters can be extremely high, DO NOT park on ground where combustible materials such as dry grass or leaves could come into contact with the exhaust system - in dry weather a fire could result.

The exhaust system incorporates catalytic converters, which convert poisonous exhaust emissions from the engine into environmentally less harmful gases.

Improper use may lead to damage to the catalytic converter, so please pay special attention to the following requirements to minimise the possibility of damage:

Fuel

- Use ONLY fuel recommended for your car.
- Never allow the car to run out of fuel – this could cause engine misfire and serious damage to the catalytic converter.

Engine Oil

- Use ONLY engine oil recommended for your vehicle. If a non-recommended oil is used, the catalytic converter may be damaged.

Note: Carry out scheduled servicing according to the maintenance schedule in the 'Warranty & Maintenance Handbook'.

Starting

Pay attention to the followings when starting the engine:

- Do not continue to operate the starter after a few failed attempts; seek an Authorised Repairer.
- Do not start the engine by depressing the accelerator pedal repeatedly after the failed attempt.

- Do not attempt to start the vehicle by pushing or towing.

Driving

Pay attention to the followings when driving the vehicle:

- Do not overload or excessively revolve the engine.
- Do not stop the engine when the car is in motion with a gear selected.
- Seek an Authorised Repairer if you think your car's engine oil consumption is abnormal or the engine performance will be reduced.
- If abnormal jitter is suspected or the car lacks power while driving, seek an Authorised Repairer.
- Do not drive on terrain likely to subject the underside of the car to heavy impacts.

Note: Any engine misfire, loss of engine performance or engine run-on, could seriously damage the catalytic converter and particulate filter. Regular maintenance must be carried out in accordance with the maintenance schedule specified by the manufacturer. Any modifications to the engine without manufacturer authorisation is prohibited.

Brake Friction Pair and Brake Fluid

DO NOT rest your foot on the brake pedal while driving; this may overheat the brakes and reduce their efficiency, causing excessive wear to the brake components.

The free travel of brake pedal is in the range of 0 ~ 30 mm.

Reasonable usage scope of brake friction pair: no less than 2 mm for thickness of brake pads, 28 ~ 30 mm for front brake disc and 10 ~ 12 mm (PHEV/HEV Model), 8 ~ 10 mm (Petrol Model) for rear brake disc.

For the first 932 miles (1500 km), you should avoid situations where heavy braking is required.

Note that regular servicing is vital to ensure that all the brake components are examined for wear at the correct intervals and replaced when necessary to ensure long-term safety during the interval prescribed in the Warranty and Maintenance Manual.

The vehicle needs to run in for 497 miles (800 km) after the brake pad or disc is replaced.

Brake Fluid Check and Top Up

Brake fluid is highly toxic, keep the brake fluid sealed and stored out of reach of children. If accidental contact of brake fluid is suspected, seek medical attention immediately.

Prevent brake fluid coming into contact with the skin or eyes. If this occurs, rinse immediately with plenty of water. If eyes are still red, painful or uncomfortable, seek medical attention immediately.

The brake fluid level should be checked weekly when the system is cold and with the car on a level ground. Clean the cover first before opening the brake fluid reservoir.

The brake fluid level can be seen through the reservoir and should be maintained between the 'MAX' and 'MIN' marks.

Note: Do not allow the brake fluid level to drop below the 'MIN' mark or rise above the 'MAX' mark.

Petrol Model

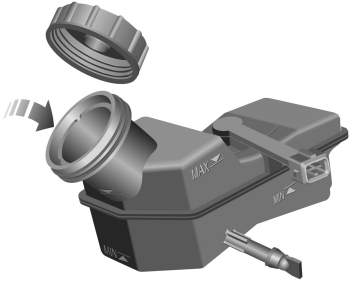

PHEV/HEV Model

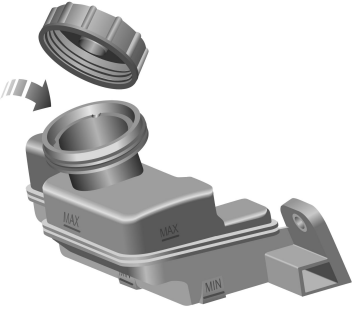

Note: Brake fluid will damage painted surfaces. If you accidentally spill the brake fluid on the painted surface, soak up any spillage with an absorbent cloth immediately and wash the area with water or car shampoo.

Fuse Replacement

Fuse

Fuses are simple circuit breakers which protect the car's electrical equipment by preventing the electrical circuits from being overloaded. A blown fuse indicates that the circuit has been protected but has failed and has stopped operating.

If you suspect a fuse is faulty, you can take it out of the fuse box and inspect it to see if the wire in the fuse is blown.

IMPORTANT
• NEVER attempt to repair a blown fuse. ALWAYS replace a fuse with one of the same rating, otherwise a fire may be caused due to electrical system damage or circuit overload. • If a replaced fuse fails immediately, please contact an MG Authorised Repairer for service as soon as possible.

It is recommended to have spare fuses in the vehicle, which can be obtained from an MG Authorised Repairer.

Fuse Box

The vehicle is equipped with 2 fuse boxes:

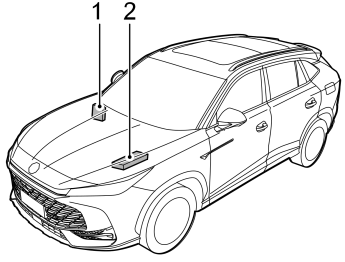

1 Passenger compartment fuse box (behind the driver side knee trim panel)

2 Front compartment fuse box (left of the front compartment)

Passenger Compartment Fuse Box

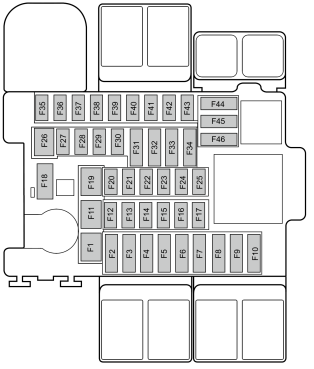

Check or Replace a Fuse

1 Turn off the Start switch and all electrical appliances and disconnect the negative battery cable.

2 Remove the driver side knee trim panel to access the fuse box.

3 Clamp the fuse head with a fuse extraction tool in the fuse box cover of the front compartment, pull and remove the fuse and check whether the fuse is blown.

4 If a fuse is blown, replace it with another fuse of the same type and same ampere value.

Fuse Specification

Code	Spec	Function
F01	40A	Blower, automatic temperature control
F02	5A	Instrument pack display, data link connector
F03	10A	Gateway
F04	5A	Front view camera module, rearward driver assistance control module
F05	5A	Driver door combination switch, driver seat lumbar support switch

Code	Spec	Function
F06	5A	Display, infotainment faceplate module (IFP), clock spring, digital audio broadcasting (DAB) module
F07	5A	Data link connector (DLC)
F08	-	-
F09	5A	Driver fatigue detection
F10	-	-
F11	25A	Driver seat adjustment switch, driver seat control module
F12	-	-
F13	5A	Shifter control unit
F14	10A	Sensing and diagnostic module
F15-F16	-	-
F17	10A	Combined charging unit (CCU)
F18	10A	Battery management system for hybrid vehicles
F19	25A	Front passenger seat adjustment switch
F20	30A	Sunroof motor
F21	20A	Entertainment mainframe
F22	-	-
F23	10A	Automatic temperature control
F24	-	-
F25	5A	Communication module
F26-F28	-	-
F29	10A	Steering column lock
F30	10A	Alcohol interlock interface device
F31-F34	-	-

Code	Spec	Function
F35	5A	Instrument pack, DC-DC converter
F36	20A	Entertainment mainframe, DC-DC converter
F37	5A	Entertainment panel switch, DC-DC converter
F38	10A	Air-conditioning, DC-DC converter
F39	15A	Super Lock Relay
F40-F44	-	-
F45	15A	Power socket
F46	10A	Wireless Charge, Rear USB

Front Compartment Fuse Box

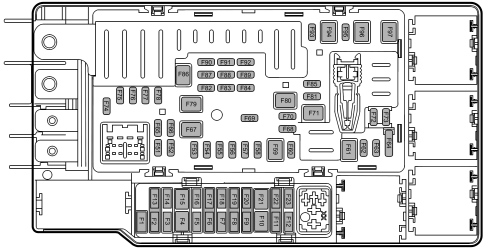

Check or Replace a Fuse

1 Turn off the Start switch and all electrical appliances and disconnect the negative battery cable.

2 Press the lock catch to open the upper cover of the front compartment fuse box.

3 Clamp the fuse head with a fuse extraction tool in the upper cover, pull and remove the fuse and check whether the fuse is blown.

4 If a fuse is blown, replace it with another fuse of the same type and same ampere value.

Fuse Specification

Code	Spec	Function
F01	-	-
F02	5A	Power liftgate control module
F03	-	-
F04	40A	Transmission control module, front windscreen heater relay
F05	5A	High-voltage electric heater
F06	15A	Towing Device Module
F07	20A	Towing Device Module
F08-F11	-	-
F12	20A	Transmission control module, DC-DC converter
F13	25A	Power liftgate control module
F14	-	-
F15	30A	DC-DC converter, front windscreen heater relay
F16-F50	-	-
F51	15A	Ignition Coil
F52	20A	Engine control module
F53	5A	Engine control module
F54	10A	Battery chiller electronic expansion valve
F55	10A	Engine control module
F56	5A	Battery current sensor

Code	Spec	Function
F57	5A	Brake Switch
F58	30A	Body control module
F59	30A	Power control unit
F60	30A	Body control module
F61	30A	Electric vacuum pump
F62	30A	Body control module
F63	10A	Reverse gear switch
F64	5A	Body control module, gateway, power control unit, parking distance sensor
F65	-	-
F66	15A	Engine Electronic Water Pump Auxiliary System
F67	60A	Integrated Brake System Pump
	40A	Stability Control System Pump

Code	Spec	Function
F68	20A	Power control unit, transmission control module, auxiliary drive control unit
F69	5A	Brake lamp switch
F70	15A	Left headlamp assembly
F71	30A	Rear right window regulator motor, rear right window switch, front passenger window switch, front passenger window regulator motor
F72	5A	Engine control module, integrated braking system, auxiliary drive control unit, transmission control module, dynamic stability control module
F73-F74	-	-
F75	15A	Variable Valva Lift Actuator

Code	Spec	Function
F76	15A	Neutral switch, fuel tank isolation valve, starter motor relay, transmission oil cooler coolant drive water pump, clutch master cylinder stroke sensor, constant pressure supply oil pump relay
	20A	
F77	15A	Rear oxygen sensor, WCAC 3-Way valve, cooling system 2-Way valve
F78	-	-
F79	60A	Integrated Brake System Valve
	40A	Stability Control System Valve
F80	30A	Rear left window regulator switch, rear left window regulator motor
F81	15A	Right headlamp assembly, front right fog lamp

Code	Spec	Function
F82	30A	Body control module
F83	-	-
F84	30A	Body control module
F85	20A	Constant pressure supply oil pump
F86	30A	Starter motor relay
F87	5A	Pedestrian alert control module
F88	-	-
F89	15A	Front windscreen washer relay, rear window washer relay
F90	10A	Left headlamp, right headlamp
F91	-	-
F92	15A	Horn relay, rear wiper relay
F93	10A	Heated exterior rearview mirror

Code	Spec	Function
F94	30A	Heated rear window
F95	30A	Body control module
F96	30A	Clutch cooling/lubrication electronic pump assembly
F97	25A	Front wiper motor

12V Battery Maintenance and Replacement

Battery Maintenance



DO NOT use on-board electrical appliancesfor an extended period of time when thevehicle is not started, otherwise the batterymay become flat, resulting in the failure tostart the vehicle and the reduction of batterylife.



Always store batteries upright and never attempt to dismantle a battery.



Please note the following:

- ***Keep away from inflammables.***
- ***Wear goggles during maintenance.***
- ***Keep away from children.***
- ***It contains acid liquid.***
- ***It is explosive.***
- ***Read the user manual for details.***

The battery of this vehicle is located under the loadspace carpet(for HEV & Hybrid model), or in the front compartment (for Gasoline model). The battery is designed to be maintenance free, so topping-up is unnecessary.

According to the current load condition and the status of the battery, the system may limit the power of some electrical appliances, please start the vehicle as soon as possible to charge the battery.

Note:

When the vehicle will not be used for an extended period, it is recommended that the battery negative terminal clamping pile head should be disconnected.

Make sure that the vehicle is powered off before connecting or disconnecting the negative battery cable.

When reconnecting the negative battery cable, ensure that the clamping pile head and the negative battery cable are properly secured.

When the vehicle will not be used for a long period of time without disconnecting the negative battery cable, it is recommended that the vehicle be driven or idled for more than half an hour per week to help prolong the life of the battery.

Battery Replacement

The battery contains sulphuric acid, which is corrosive.

Please contact an MG Authorised Repairer to remove and refit the battery. Only fit a replacement battery of the same type and specification as the original to maintain the correct vehicle functionality.



The battery must be disposed of using an approved method, used batteries can be harmful to the environment. It should be recycled by a professional company. Please consult an MG Authorised Repairer for more details.

Bulb Replacement

Bulb Specification

The light sources of this model are all LED lamps, which cannot be replaced individually.

If the light source is damaged, please seek an MG Authorised Repairer.

Note: The fogging of the vehicle's headlamp and taillamp in low-temperature or high-humidity environments, or after heavy rain/washing, is a normal physical phenomenon and does not affect the functionality or lifespan of the lamp.

Note: When the vehicle is parked in a dry, well-ventilated environment, or when the external lamp are turned on and the vehicle is in motion, the fog will gradually evaporate, with only minor residues possibly remaining in the corners of the lamp.

Note: If you notice significant water accumulation or numerous water droplets inside the lamp, please seek a local MG Authorised Repairer for service.

High-voltage Battery Pack*

Precautions and restricted conditions for use of battery

For daily use of vehicle, it is recommended to fully charge the battery at least once a week, which is good for the health maintenance of the battery; and it is recommended to fully charge the battery (<10% or 1 bar of power) every 3 months to 6 months.

For HEV models, if the vehicle is not going to be used, parked, or stored for a long time it is necessary to use the vehicle at least once every two months for more than 30 minutes each time (the power of high-voltage battery pack shall be maintained at 50% charge (or 4 gauge blocks) or more). It is strictly prohibited to park or store a vehicle fitted with a high-voltage battery pack for more than 7 days if the power of the high-voltage battery pack is low, failure to follow these guidelines may effect the high voltage battery warranty.

For PHEV models, if the vehicle is parked for a long time, ensure that the SOC of the high-voltage battery pack displayed on the instrument pack is above 50%. It is prohibited to park the vehicle for more than 7 days when the battery of the high-voltage battery pack is low (there is no valid pure electric driving range displayed on the instrument pack), otherwise SAIC Motor will not fulfill the warranty terms for resulted damage of high-voltage battery pack.

Do not attempt to remove the high-voltage battery pack or any high-voltage components - these are dangerous. Any traces of removal or damages caused by attempted removal will invalidate the warranty.

1 DO NOT park the vehicle in conditions where the ambient temperature exceeds 45°C for more than 15 days. This will effect the performance and service life of the high-voltage battery pack.

2 In order to better extend the service life of the high-voltage battery pack, it is recommended to use the vehicle at least once a month to facilitate the charging and maintenance of the high-voltage battery pack and each use lasts for 30 minutes or more.

3 When the vehicle is used for the first time or after long-term parking, the SOC displayed on the instrument pack may have deviation. It is recommended to drive at low speed (19-31 mph) for 20~30 minutes before normal use.

4 When an accident causes damage to the high-voltage battery pack or any of its related components or any repairs are made to the high voltage system, the vehicle must be inspected at an MG Authorised Repairer.

5 If the accident causes damage to vehicle body, when it is required to conduct cutting, welding and paint spraying for sheet metals, in order to avoid damage to the high-voltage battery pack, please contact an MG Authorised Repairer and conduct related operations after removing the high-voltage battery pack.

IMPORTANT
Unauthorised maintenance personnel are strictly prohibited from disassembling and assembling the high-voltage system and related components of the vehicle.

Washer

Washer Fluid Check and Top Up

DO NOT allow washer fluid to come into contact with naked flames or sources of ignition since washer fluid is flammable.

When filling the washer fluid, DO NOT let the washer fluid spill on parts around the engine or on the paint surface of vehicle body. In case the washer fluid is spilled on hands or other parts of the body, please immediately wash with clean water.

Check the washer fluid level regularly. When the level of washer fluid is low, please top up the washer fluid as instructed. Use the washer fluid recommended and certified by MG. Refer to 'Recommended Fluids and Capacities' in the 'Technical Data' chapter.

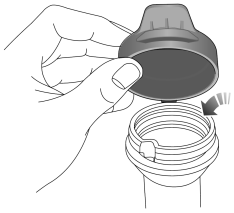

Note: DO NOT use an anti-freeze or acid solution (such as diluent of vinegar) in the fluid reservoir - anti-freeze will damage paintwork while acid solution will damage the washer motor.

Note: Select the appropriate detergent type based on seasonal temperatures, choosing between regular temperature and low-temperature detergents, to prevent the detergent from becoming unusable or freezing, which could damage the washing system.

IMPORTANT
• Use the washer fluid recommended and certified by the manufacturer. Misuse of washer fluid in winter may cause damage to the washer motor due to freezing. • Using the washer switch when there is no washer fluid may cause damage to the washer motor. • Operating the wipers when the windscreen is dry and there is no washer fluid may cause damage to the windscreen and wipers. Please spray the washer fluid and start the wipers when there is adequate washer fluid.

Washer Nozzles

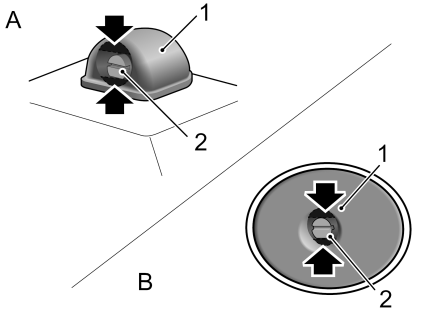

The front windscreen washer nozzle (A) is located on the A/C air intake grille panel of the engine compartment and the rear window washer nozzle (B) is located on the spoiler behind the body.

Operate the washers periodically to check that the nozzles are clear and properly directed.

The angle of windscreen washer nozzles is configured during delivery, so generally there is no need for adjustments. To adjust the windscreen washer nozzle, you can insert a small flat-bladed screwdriver in the gap (black area as indicated by the arrow) between the housing (1) and the nozzle (2) and turn downward or upward slightly to achieve an appropriate injection angle.

If the nozzle is obstructed, insert a needle or thin metal wire into the hole to remove the obstruction.

Wipers

Wiper Blades

IMPORTANT
• Grease, silicon and petroleum products impair the blade's wiping capability. Clean the wiper blades in warm soap water and check their status periodically. • Clean the windscreen frequently. DO NOT use wiper blades to remove stubborn or ingrained dirt, it will reduce their effect and their life span. • If signs of hardness or cracking in the rubber are found or if the wipers leave streaks or unwiped areas on the windscreen, then the wiper blades should be replaced. • Clean the windscreen regularly with an approved glass cleaner and ensure the windscreen is thoroughly cleaned before the replacement of wiper blades. • Only fit the wiper blades that are identical to the original specification. • Clean ice and snow from the wipers and ensure they are not frozen or otherwise, sticking to the windscreen before attempting to operate them.

Front Windscreen Wiper Blade Replacement*

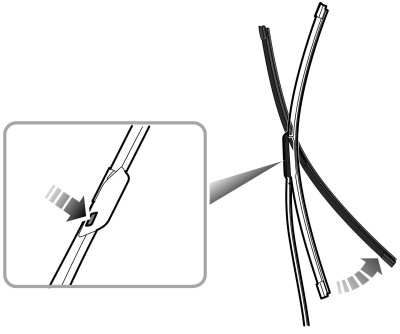

1 With the bonnet its closed state and the Start switch in the 'OFF' position for up to 20 seconds, press down the wiper stalk switch to Single Wipe position (see 'Wipers and Washers' in 'Instruments and Controls' section) and release, the wiper will automatically move to the service position and stop on the windscreen.

2 Lift the wiper arm away from the fixed position of windscreen.

3 Turn the wiper blade to the service position, press the button on the wiper blade (as illustrated), and pull the wiper blade upward to disengage it from the wiper arm.

4 Unhook the blade from the wiper arm and discard.

5 Turn a new wiper blade to the same position, and insert the connector of the wiper blade into the wiper arm until a 'click' is heard to ensure complete insertion.

6 Put the wiper assembly back onto the windscreen and check whether the wiper blade is fixed correctly onto the wiper arm.

7 Press down the wiper stalk switch again to the Single Wipe position and release, or turn on the Start switch, the wiper will exit the service mode and automatically return to its original position.

Front Windscreen Wiper Blade Replacement*

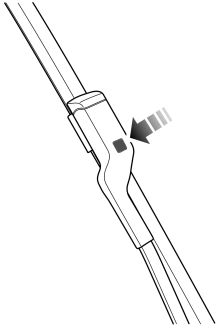

1 With the front hatch cover in the closed state, click the vehicle icon on the large screen and select 'Safety - power off' in turn within 20 seconds and then operate the wiper lever switch by pressing down to the single wipe position (see 'Wipers and Washers' in the 'Instruments and Controls' chapter) and releasing it, the wiper will automatically move to the service position and stop on the windscreen.

2 Lift the wiper arm away from the windscreen.

3 Press the button on the wiper arm (as illustrated) and pull the upper end of the wiper blade outward to disengage from the wiper arm.

4 Unhook the blade from the wiper arm and discard it.

5 Locate the new wiper into the slot of the wiper arm.

6 Push the wiper blade towards the arm until the wiper blade is engaged.

7 Place the wiper assembly back to the windscreen and check whether the wiper blade is fitted correctly to the arm.

8 Operate the wiper lever switch by pressing down to the single wipe position again and releasing it or power on the vehicle, the wiper will exit the service mode and automatically return to its original position.

Rear Window Wiper Blade Replacement

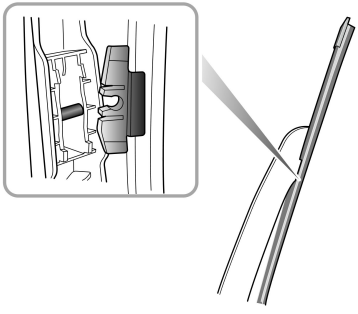

1 Lift the wiper arm away from the windscreen.

2 Pull the wiper blade connector outward with moderate force to separate it from the wiper arm and discard the wiper blade.

3 Put the fitting of the new wiper blade into the slot of the wiper arm. Ensure the wiper blade is properly secured on the wiper arm.

4 Place the wiper assembly back on the rear window.

Tyres

Overview

- New tyres may not have optimum adhesion properties, please drive at a moderate speed in an appropriately careful driving style for the first 310 miles (500 km).
- You can only drive at low speed when passing kerbs or similar sections and pass the wheels through the kerbs at right angle as far as possible.
- Regularly check tyres for damage (punctures, scratches, cracks and pits) - remove any foreign objects from the tread.
- The valve dust cap must be fitted to prevent dust from entering the valve.
- If the tyre is to be removed, always mark the tyre/wheel orientation to ensure correct reinstallation.
- Store the removed wheel or tyre in a cool, dry and dark place.

The damage of a tyre or rim may happen unnoticeably. If abnormal vibration or deviation is experienced, that means the tyre may have been damaged. If you suspect that the tyres are damaged, please be sure to immediately reduce the speed and stop to check the tyres for damage. If you can't see any damage from the outside, you MUST drive at a low speed to the nearest MG Authorised Repairer for inspection.

Tyres with Directional Tread Patterns

The profile of tyres with directional tread patterns is marked with an arrow and you must use the tyres in this specified direction of rotation. Thus the optimised tyre rideability in preventing hydroplaning, improving adhesive ability, reducing running noise, extending wear life, etc. can be ensured.

Service Life of Tyres

Rational tyre pressure and moderate driving style can extend tyre life. Recommendations during use are as follows:

- Check the tyre pressures at least once a month, it should be carried out when the tyre is cold;
- Avoid cornering at excessive speeds;
- Regularly check tyres for abnormal wear patterns.
- When the vehicle is to be parked for a long time, please move it at least once every two weeks and check the tyre pressure to prevent deformation of the tyres due to long-term stress.

The following factors affect the tyre life:

Tyre Pressure

Over or under-inflated tyres will cause the abnormal wear of the tyre, greatly shorten the service life and have an adverse effect on the driving characteristics of the vehicle.

Driving Style

Fast driving, excessively harsh acceleration and braking whilst cornering will aggravate the tyre wear.

Wheel Dynamic Balance

The wheels of a new vehicle are subject to dynamic balance testing, but out of balance wheels may still be caused due to the effects of various factors in operation.

If wheels are out of balance, shaking or vibration of the steering mechanism may occur and the tyres may start to wear excessively. It is important to restore wheel balance as quickly as possible. Each wheel should be rebalanced after installing a new tyre or having a tyre repair.

Wheel Alignment Defect

Incorrect wheel alignment can cause excessive tyre wear and affect vehicle safety. If the tyres show signs of abnormal wear, check the wheel alignment and seek advice from an MG Authorised repairer.

Tyre Inspection

USE OF DEFECTIVE TYRES ARE DANGEROUS! DO NOT drive if any tyre is damaged, excessively worn or inflated to an incorrect pressure.

It is recommended to install the tyres consistent with the original specifications. DO NOT replace the tyres with tyres of any other type. Alternative tyres, of a different specification, may adversely affect the vehicle's driving characteristics and safety. For better guarantee of your safety, we recommend you consult an MG Authorised Repairer.

Always drive with consideration for the condition of the tyres and regularly inspect the tread and side walls for any sign of distortion (bulges), cuts or wear.

Note: Prevent tyres from coming into contact with oil, grease and fuel.

Tyre Pressure

Before a long distance journey, the tyre pressure must be checked.

Check the pressures at least every month, when the tyres are cold.

If it is necessary to check the tyres when they are warm, you should expect the pressures to have increased by 30 ~ 40 kPa (i.e. 0.3 ~ 0.4 bar). In this circumstance, NEVER let air out of the tyres in order to match the recommended pressures (cold) in the technical data.

Valves

Keep the valve caps firmly secured to prevent dirt from entering the valve. Check the valve for leaks (listen for a tell-tale hissing) when you check the tyre pressure.

Punctured Tyres

Your vehicle is fitted with tyres which may not leak if penetrated by a sharp object, provided the object remains in the tyre. If you are aware of this occurring, reduce speed immediately and drive with caution until the spare wheel can be fitted or repairs undertaken.

Note: If the sidewall of the tyre is damaged or distorted, replace the tyre immediately, do not attempt to repair it.

Tyre Wear Indicators

The tyres fitted as original equipment have 1.6 mm-high wear indicators at their tread pattern bottom, vertical with the wheel rolling direction and evenly distributed around the circumference. The mark on the tyre side such as capital letters TWI or triangular symbol shows the location of the wear indicator.

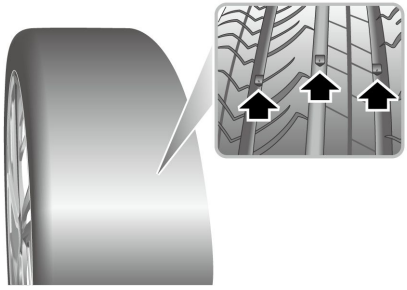

When the tread has worn down to 1.6 mm or below, the indicators will come to the surface of the tread pattern, producing the effect of a continuous band of rubber across the width of the tyre.

IMPORTANT
A tyre MUST be replaced as soon as a wear mark becomes visible. Otherwise there may be a risk of an accident.

Tyre Rotation

It is recommended that you swap wheels at irregular intervals in order to equalise tyre wear.

When the tyres are worn thoroughly, it is recommended to swap the front and rear wheels as shown in illustration. This can prevent tyres from uneven wear, prolong the life span and balance tyre fatigue.

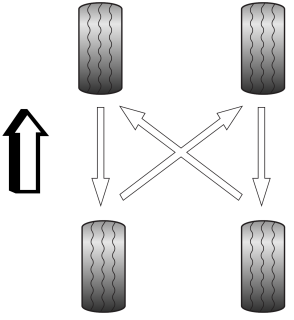

Note: Directional tyres (identified from the arrow on the tyre side) CANNOT be swapped from side to side.

Note: After the wheel rotation, TPMS self-learning will be required, please consult an MG Authorised Repairer for details.

Snow Chain

Unsuitable snow chains may damage the tyres, wheels, suspension, brakes or bodywork of your vehicle.

Please pay attention to the following requirements in the usage:

- The snow chains can only be fitted on the front wheels;
- The thickness of snow chains shall not exceed 15 mm;
- Please always observe the installation and tension instructions for the snow chains, as well as the speed limitations of different roads;
- Do not drive faster than 30 mph (50 km/h);
- To avoid the tyre damage and excessive wear of the snow chains, the snow chains must be removed while driving on the road without snow.

Size and Specifications of Wheels and Tyres Supporting Snow Chains for This Vehicle	
Wheel Rim Size	6.5J×18
Tyre Size	215/60 R18 98V

Note: If you often drive on the snowy and icy roads, it is recommended to use winter tyres. Consult MG Vehicles Authorised Repairer for details.

Cleaning and Care



Observe all safety precautions on cleaning products; Do NOT drink fluids and keep them away from the eyes.

Automobile External Care

Vehicle Cleaning



You can only clean the vehicle with the vehicle power off, otherwise there might be a risk of an accident occuring.



When cleaning the vehicle in winter, moisture or ice in the braking system can reduce braking effectiveness and may increase the risk of an accident occuring.



Do not use high-pressure water to clean the front cabin, as it may damage the vehicle's electrical system.

Frequent washing and waxing can effectively protect the car from harmful environmental effects and some covered areas should be cleaned regularly, such as: door sills, seal areas, and covers. The interval for washing the car depends on various factors. For example:

- Usage frequency;
- Parking storage area;
- Seasons;
- Climate conditions;
- Environmental impact;

The longer insect residues, bird droppings, resin, road dust and industrial dust, asphalt, coal smoke particles, snow salts and other corrosive deposits adhere to car paint, the greater the damage they cause. Excessive temperature, such as strong sunlight exposure, can also exacerbate erosion. Therefore, please clean the vehicle according to its actual condition.

After the winter salting period ends, be sure to thoroughly clean the underside of the car once more.

Note: It is recommended that the camera is to be protected whilst the vehicle is being washed to avoid damage to the surface of the vehicle and the camera from car wash equipment, brushes or or hard objects such as small stones that may be contained therein.

Automatic cleaning equipment

Car paint has a certain wear resistance, so generally, it is completely possible to use automatic cleaning equipment

to wash the car. In fact, the structure of the cleaning equipment, the water filtration condition and the type of cleaning and maintenance agents have a certain impact on the car paint, please choose the cleaning equipment suitable for your car.

Before automatic cleaning, you should close the windows and sunroof and also ask the cleaning equipment operator if it is necessary to remove the roof antenna, if your car has additional attachments such as spoilers, roof racks and radio antennas, you need to inform the cleaning equipment operator.

Manual cleaning

Please choose detergents with caution based on actual needs and rinse the vehicle with clean water after using detergents.

IMPORTANT
• Do not wash your vehicle in direct sunlight in hot weather. Wait for the exterior of the vehicle to cool down before cleaning. Otherwise, there is a risk of damaging the paint/external light surface. • When cleaning the vehicle in winter avoid spraying water directly onto door locks, panel gaps and sunroof seams due to risk of icing. • Do not use rough sponges or cloth to clean the car, this will damage the paintwork finish. • When cleaning the lamps do not use a dry cloth or sponge, use a soft microfibre cloth with a small amount of room temperature water/soapy water to clean the lamps.

Cleaning with high pressure washer

Before cleaning: Please be aware of the high-pressure washer operation instructions and precautions. Please check and ensure the front and rear doors, front and rear covers, charging port flap(if any), fuel flap(if any) and hidden door handles(if any)are closed.

Cleaning process: Be sure to control the jet pressure, and keep the jet nozzle at a certain distance from the cleaning area, especially soft materials (such as rubber hoses, soundproofing materials, etc.). Avoid prolonged rinsing of the same area.

After cleaning: Gently press the brake pedal several time to remove moisture from the brake discs to prevent affecting braking performance and avoid rusting of the brake discs. Completely clear residues on windows, rearview mirrors, etc., to avoid obstructing the view.

IMPORTANT

- The soft parts on the vehicle should be kept in a large enough distance from the injection port of the high pressure cleaner.
- High-pressure rinsing may cause damage or peeling off of the stickers on the paint surface.

IMPORTANT

- DO NOT spray the nozzle of the high-pressure cleaner directly into the door cracks, windows, sunroof, bonnet and tailgate, etc.
- DO NOT attempt to flush any open front and rear doors, bonnet and tailgate, small doors, etc.
- DO NOT spray or clean a window glass that is frozen or has been covered with snow.
- DO NOT spray directly onto connectors, seals, tyres, rubber hoses, heat insulation materials or other sensitive vehicle parts (such as small doors, small door locks, door locks, sensors, radars, cameras, etc.), and DO NOT hold a high pressure water jet in one position for a long time.
- DO NOT use a circle beam nozzle or rotary nozzle, especially for the tyres, this may cause damage.

Waxing

A high-quality layer of wax can effectively protect car paint from harmful environmental effects and can even provide protection against minor scratches. If you notice that water droplets no longer roll off clean paint smoothly, it is time

to apply a new layer of high-quality hardwax protectant. Even when using automatic car wash equipment, use wax protectant regularly and apply hard wax at least twice a year toprotect the car paint.

Polishing the Paintwork

When the car's paint has lost its shine and waxing cannot restore it, only then is polishing needed.

If the used polish does not contain wax components, then the paint must be waxed after polishing, generally, a polish with the following characteristics is used to treat the paint surface:

- Very mild abrasives can remove surface stains without damaging the paint.
- Fillers can cover scratches.
- Waxing can provide a protective layer on the paint surface.

Note: DO NOT polish matte painted part or plastic part.

Paint damage

Small areas of paint damage, such as scratches or stone chips, should be painted immediately to prevent rust. If rust has already occurred, it must be completely removed, then a rust-proof primer should be applied to the area and finally, a topcoat should be applied.

Matte Paint

Matte paint is a special type of coating and special care should be taken in car washing and maintenance.

It is recommended to wash the car manually and do notuse rough sponges or cloth. Do not use excessive forcewhen cleaning and wiping. Avoid washing the car in directsunlight.

- Do not use high pressure or steam to clean the vehicle, if the vehicle is very dirty, pre-cleaning is required before washing, first clean off dust and other particles that may damage the paint surface.
- Use a large amount of clean water to spray the car body and use a soft sponge and neutral wax-free car wash liquid to clean the carbody from top to bottom, then dry it.

When taking care of the car daily, attention should also be paid:

- If the paint film comes into contact with resin or grease, as well as insect residues or bird droppings, etc., please remove immediately to avoid irreversible damage tothe matte paint surface.
- If there is grease or fingerprints on the matte paint surface, immediately remove it with a clean cloth, do not use excessive force, to avoid causing irreversible damage to the matte paint surface.
- To maintain the matte finish of the paint, do not use abrasive, polish and wax, the body cannot be polished.
- Do not use any stickers, patches, magnets or similar items, to prevent damage to the paint surface.
- Be sure to carry out paint film repair in a qualified professional repair workshop.

Wiper Blades

Wash in warm soapy water. DO NOT use spirit or petrolbased cleaners.

Windows and Mirrors

Regularly clean all windows, inside and out, using anapproved glass cleaner.

Windscreen : Clean the outside of the windscreen withglass cleaner before fitting new wiper blades.

Rear windscreen : Clean the inside with a soft cloth, using a sideto side motion to avoid damaging the heating elements.DO NOT scrape the glass or use abrasive cleaningcompositions – this will damage the heating elements.

Rearview mirrors : Wash with soapy water. DO NOT useabrasive cleaning compositions or metal scraper.

Sunroof (if any) : Regularly clean the guide rails on both sides and the front drainage trough of the sunroof, if it is a panoramic sunroof, also regularly clean the front end of the rear glass(after the front glass is fully opened) to prevent the accumulation of dust, sand, leaves and other debris, so as not to block the drainage holes, causing poor drainage of the sunroof.

Plastic Parts

Plastic parts can be cleaned by the conventional method ofcleaning. When the stain is not easy to remove, you canuse special curing agent for treatment and the paint curingagent is not preferable for treatment of plastic parts.

Weather Strips

Rubber seals on doors, front and rear cowl covers, sunroofs and windows should be sprayed with a rubber conditioner (e.g. silicone spray) from time to time to maintain their flexibility and extend their service life.

Exterior Lamps

It is recommended to use a mild neutral cleaner to clean the surface of the lamps and avoid using detergents containing alcohols, polyols and strong polar organic solvent cleaners(such as foam cleaners, glass cleaners, thinners, de-icers, paint surface treatment agents, etc.), otherwise it may cause the lamp surface to crack, causing damage to the car lights. The car lights should be protected during vehicle washing or car cover operations.

Wheels



Ensure care is taken when cleaning the wheels as to ensure materials or water do not come into contact with the brakes.

Cleaning the wheels can prevent brake dust and deicing salt from adhering to them. Stubborn brake dust can be removed with a non-acidic wheel cleaner.

Light Alloy Wheels

To maintain the appearance of light alloy wheels for a long time, regular maintenance is required, if snow-melting salt and brake dust are not regularly washed off, the light alloy wheels will be corroded.

Be sure to use a non-acidic special cleaner for cleaning. Do not use paint polish or other abrasive products when maintaining the wheels, if the paint protective layer is damaged(such as stone chip damage), the damaged area must be repaired immediately.

Bottom protection layer

The bottom of the car is coated with special durable protective materials, which can prevent damage from chemical and mechanical factors. However, since damage to the protective layer is unavoidable during use, it is recommended to regularly inspect the protection layer of the car's bottom and chassis, preferably once before and once after the cold season.

Automobile Internal Care

When applying film or cleaning to the interior of a vehicle, if water, alcohol, or other cleaning agents need to be sprayed, it is necessary to take protective measures (such as placing a cloth or absorbent sponge around the spraying area), and wipe the liquid clean as soon as possible after applying film or cleaning to prevent the liquid from flowing into the vehicle's electrical appliances and causing damage to the vehicle.

Condensers, radiators and cooling fans

During the daily driving process of the vehicle, the condenser, radiator and cooling fan may accumulate some dirt blades, which can lead to deviations in the air conditioning system, cooling system or vehicle noise. Please pay attention during routine maintenance and cleaning, if there is dirt, rinse with clean water or wipe with a cloth. Be careful during the cleaning process, to avoid damaging the fins or blades of the condenser, radiator, fan and other components.

Air Conditioning Cleaning

During the daily use of car air conditioning, some dirt may accumulate inside the air conditioning system, affecting the normal operation of the air conditioning system, so the interior of the air conditioning needs to be cleaned. It is recommended to visit an Authorized Service Center for professional handling.

Note: It is recommended to use a small amount of cleaning agent in the form of spray when cleaning the air conditioning to avoid vehicle failure caused by liquid flowing into on-board electrical appliances.

Plastic parts, artificial leather and fabrics

Plastic parts and artificial leather can be cleaned with a damp cloth. If stains cannot be removed, only use a special solvent-free plastic cleaner and conditioner to clean these parts.

Soft pads and fabric finishes on doors, trunk lid panels, roof, etc., should be cleaned with a special cleaner or dry foam and a soft sponge.

Note: DO NOT polish dashboard components – these should remain non-reflective.

Airbag Covers

DO NOT allow these areas to be flooded with liquid and DO NOT use petrol, detergent, furniture cream or polishes.

To prevent airbag damage, only use a damp cloth and upholstery cleaner to carefully clean the following areas:

- Steering wheel center panel.
- Dashboard area of the passenger airbag.
- Roof lining with head side airbags.

Seat Belts

DO NOT use bleaches, dyes or cleaning solvents on seat belts.

Pull out the seat belt, then clean with warm water and neutral soap. Allow the seat belt to air dry naturally. Do not stretch or use the seat belt until it is completely dry.

Carpets and fabrics

Before cleaning with a diluted upholstery cleaner, test it in an inconspicuous area first.

Leathers

The leather used in automobiles has a certain specificity and particularity(such as sensitivity to oil, grease, stains, etc.), during use and maintenance, it must be thoughtful and meticulous. For example:

- Dark(especially damp) and easy-to-fade textile fabrics may transfer their color onto leather seats ;
- Dust and dirt particles entering leather pores, creases and seams can wear the leather surface.

Therefore, maintenance should be carried out regularly or according to the use of the leather. For deep care, it is recommended to visit an Authorized After-sales Service Center.

Recommended cleaning method

1 Use a white clean cloth to dip in clean water and wring it out, gently wipe the leather surface to remove dust, repeat two or three times, open the window for ventilation and let it dry naturally. Avoid high temperature exposure or using a hair dryer to dry.

2 If there is dirt that cannot be removed with clean water, please use a leather-specific cleaner that does not contain solvents or a neutral soap solution to wipe.

Note: Solvents mainly include: various alcohols, strong acids and bases, amides, oleic acids, gasoline and other solvent-containing substances.

IMPORTANT
• Always clean at room temperature, and the temperature should not exceed 45 ℃. • DO NOT use solvent-based cleaners: solvent-based cleaners (including ethanol) will cause colour loss/surface coating damage. • It is recommended to clean immediately after contamination, some stains will be very difficult to remove if left for a long time. • It is recommended to use all-polyurethane sponge for cleaning materials, and DO NOT use magic or wet wipe. It is recommended to choose non-woven fabrics with good water absorption and ethanol-free wipes for cleaning cloths.

Recommended maintenance advice

- Use special maintenance oil after each cleaning. The maintenance oil can nourish the leather,making it flexible, breathable and restore moisture, while also creating a protective layer on its surface.
- Clean the leather every two to three months and remove stains promptly.
- Remove ink marks, shoe polish stains, etc., as soon as possible.

Note: Common liquids containing solvent components include various alcohols, strong acids and basesClass, amide class, oleic acid class, gasoline class, etc.

Combination Instruments, Entertainment Displays

Clean only with a soft, dry cloth.

Technical Data

Technical Data Dimensions	*376*
Complete Vehicle Mass Parameters	*378*
Main Engine Parameters	*379*
Drive Motor Performance Parameters	*380*
Parameters of High-voltage Battery Pack	*381*
Dynamic Performance Parameters	*387*
Recommended Fluids and Capacities	*388*
Wheel Alignment (Unladen Condition)	*391*
Wheels and Tyres	*392*
Tyre Pressures (Cold)	*393*

Technical Data Dimensions

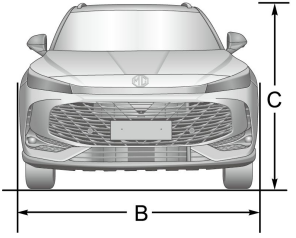

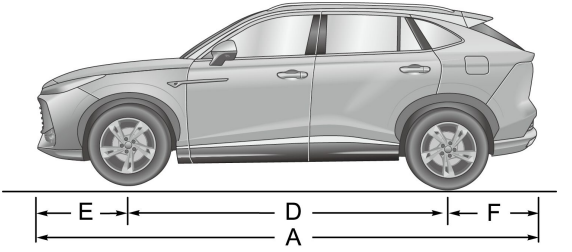

Item, units	Parameter Value			
	1.5T Gasoline	2.0T Gasoline	PHEV	HYBRID+
Overall length A , mm	4655	4655	4670	4670
Overall width B , mm	1890	1890	1890	1890
Overall height C (unladen), mm	1655 (18" tyre) 1664 (19" tyre)	1664 (19" tyre)	1654 (18" tyre) 1663 (19" tyre)	1654 (18" tyre) 1663 (19" tyre)

Item, units	Parameter Value			
	1.5T Gasoline	2.0T Gasoline	PHEV	HYBRID+
Wheelbase D , mm	2765	2765	2765	2765
Front overhang E , mm	970	970	972	972
Rear overhang F , mm	920	920	933	933
Front wheel track, mm	1590	1590	1590	1590
Rear wheel track, mm	1584	1584	1584	1584
Minimum turning circle diameter, m	11.55	11.55	11.55	11.55
Fuel tank capacity, L	55	65	55	55

Note: Vehicle length not including the license plate.

Note: Rearview mirrors and the deformed portion of tyre wall directly above the touchdown point are not included in the total width.

Complete Vehicle Mass Parameters

Item, units	Parameter Value			
	1.5T Gasoline	2.0T Gasoline	PHEV	HYBRID+
Person in cab, person	5			
Unladen vehicle weight (kerb), kg	1585 / 1590 / 1630 / 1550 / 1575 / 1600	1670 / 1675	1850 / 1875 / 1900	1765 / 1795
Gross vehicle weight, kg	2060 / 2065 / 2105 / 2025 / 2050 / 2075	2145 / 2150	2325 / 2350 / 2375	2165 / 2195
Unladen front axle weight, kg	943 / 946 / 963 / 920 / 935 / 946 / 961	1005 / 1008	1081 / 1095 / 1110	1047 / 1056
Unladen rear axle weight, kg	642 / 644 / 667 / 630 / 640 / 629 / 639	665 / 667	769 / 780 / 790	718 / 739
Laden front axle weight, kg	1055 / 1058 / 1075 / 1032 / 1047 / 1057 / 1072	1117 / 1120	1193 / 1207 / 1222	1119 / 1128
Laden rear axle weight, kg	1005 / 1007 / 1030 / 993 / 1003	1028 1030	1132 / 1143 / 1153	1046 / 1067

Main Engine Parameters

Item, units	Parameter Value		
	2.0T	1.5T (EDU)	1.5T (MT/DCT)
Bore × Stroke, mm × mm	82.5×92.9	73.5×88.1	73.5×88.1
Total displacement, L	1.986	1.496	1.496
Compression ratio	11.5	13.5	10.5
Maximum net power, kw	170	105	125
Rated power, kw	170	105	125
Engine speed at maximum power, rev/min	5500-6000	5500	5500
Maximum torque, Nm	380	230	275
Engine speed at maximum torque, rev/min	2500-3500	4000	3000-4000
Fuel grade, RON	RON 95 and above unleaded gasoline or gasohol E5/E10	RON 95 and above unleaded gasoline or gasohol E5/E10	RON 95 and above unleaded gasoline or gasohol E5/E10

Drive Motor Performance Parameters

Item, units	Parameter Value
Hybrid motor e-mode rated power/speed/torque, kw/rpm/n.m (PHEV)	ISG motor: 67kW/12000r/min/54Nm TM motor: 80kW/6000r/min/128Nm
Hybrid motor e-mode peak power/speed/torque, kw/rpm/n.m (PHEV)	ISG motor: 126kW/17000r/min/120Nm TM motor: 154kW/17000r/min/340Nm
Hybrid motor e-mode rated power/speed/torque, kw/rpm/n.m (HEV)	ISG motor : 62kw/12000r/min/50Nm TM motor : 76kw/4500r/min/161Nm
Hybrid motor e-mode peak power/speed/torque, kw/rpm/n.m (HEV)	ISG motor : 117kw/17000r/min/120Nm TM motor : 146kw/17000r/min/340Nm

Parameters of High-voltage Battery Pack

Battery pack type 1 (21kWh)

Parameters	Value	
Battery type (model)	**BR065A21S1**	
Rated Capacity (Ah)	65@1C@25℃	
Capacity fade (%)	10@1100cycle@25℃	
Power (W)	SOC	BOL discharge power(W)@10s@25℃
	80%SOC	123552
	20%SOC	68328
Power fade (%)	10@1100cycle@25℃	
Internal resistance (Ω)	SOC	BOL discharge DCR(Ω)@4C@10s@25℃
	50%	0.137
Internal resistance increase (%)	15@1100cycle@25℃	

Energy round trip effciency (%)	95@25℃
Energy round trip effciency fade (%)	3.5@1100cycle@25℃
Expected life-time (cycles)	3500@70%SOHe@25℃
Expected life-time (calendar years)	16@70%SOHe@25℃

Battery pack type 2 (24kWh)

Parameters	Value	
Battery type (model)	**BR065A24S1**	
Rated Capacity (Ah)	65@1C@25℃	
Capacity fade (%)	10@1100cycle@25℃	
Power (W)	SOC	BOL discharge power(W)@10s@25℃
	80%SOC	137280
	20%SOC	75920
Power fade (%)	10@1100cycle@25℃	
Internal resistance (Ω)	SOC	BOL discharge DCR(Ω)@4C@10s@25℃
	50%	0.155
Internal resistance increase (%)	15@1100cycle@25℃	
Energy round trip effciency (%)	95@25℃	
Energy round trip effciency fade (%)	3.5@1100cycle@25℃	

Expected life-time (cycles)	3500@70%SOHe@25°C
Expected life-time (calendar years)	16@70%SOHe@25°C

Battery pack type 3 (1.84kWh)

Parameters	Value	
Battery type (model)	**SQ-5.2Ah-1P96S-2**	
Rated Capacity (Ah)	5.2@1C@25℃	
Capacity fade (%)	10@1253cycle@1C@25℃	
Power (W)	SOC	BOL discharge power(W)@2s@25℃
	80%SOC	138500
Power fade (%)	25@1253cycle@2s@25℃@80%SOC	
Internal resistance (Ω)	SOC	BOL discharge DCR(Ω)@30C
	50%	0.2
Internal resistance increase (%)	4@1253cycle@25℃	
Energy round trip effciency (%)	97@25℃	
Energy round trip effciency fade (%)	3@1253cycle@25℃	

Expected life-time (cycles)	1253@91%SOH@25°C
Expected life-time (calendar years)	10@80%SOH@25°C

Dynamic Performance Parameters

Item, units	Parameter Value				
	1.5T MT	1.5T DCT	2.0T	PHEV	HYBRID+
Maximum speed, km/h	190	195	220	200	190
Gradeability, %	30	30	30	30	30

Note: The dynamic performance parameters are test data under specific conditions.

Note: Gradeability is affected by different road surfaces, tyre pressures, tyre tread depth and vehicle load.

Recommended Fluids and Capacities

Name	Grade	Capacity				
		1.5T - DCT	1.5T - PHEV	1.5T - HEV	1.5T - MT	2.0T - 9AT
Engine oil (after-sales replacement), L	C5&SP 0W-20	4	4	4	4	4.8
Engine coolant, L	Glycol (OAT)	7.3	7.6	7.6	6.6	7.8
Water-cooled intercooler coolant, L		3	-	-	3	-
Drive motor control module coolant, L		-	7.2	7.2	-	-
Power battery coolant , L		-	-	2.4	-	-

Name	Grade	Capacity				
		1.5T - DCT	1.5T - PHEV	1.5T - HEV	1.5T - MT	2.0T - 9AT
DCT gear oil, L	Dexron DCT Fluid	2.45	-	-	-	-
DCT hydraulic oil, L	Pentosin CHF 202	1.8	-	-	-	-
DCT clutch oil, L	Castrol BOT 280b	2.15	-	-	-	-
Hybrid transmission oil, L	SL 2808	-	1.8	1.8	-	-
Manual transmission oil, L	MTF94	-	-	-	2.2	-
Automatic transmission oil, L	Shell ATF L12108	-	-	-	-	7.2
Brake fluid, L	DOT 4	0.8	0.8	0.8	0.8	0.8

Name	Grade	Capacity				
		1.5T - DCT	1.5T - PHEV	1.5T - HEV	1.5T - MT	2.0T - 9AT
Windscreen washer fluid, L	Room/Low temperature detergent	3	3	3	3	3
Air conditioning refrigerant	R-134a*	560±20g	980±20g	700±20g	-	480±20g
	R-1234yf*	0.56±0.02kg	0.98±0.02kg	0.7±0.02kg	0.56±0.02kg	-
	HFC-1234yf*	0.56±0.02kg	0.98±0.02kg	0.7±0.02kg	0.56±0.02kg	-
	contains fluorinated greenhouse gases	GWP 0.501	GWP 0.501	GWP 0.501	GWP 0.501	-
		CO_2eq 0.0003t	CO_2eq 0.0005t	CO_2eq 0.0004t	CO_2eq 0.0003t	-

Wheel Alignment (Unladen Condition)

Item, units		Parameters
Front Wheel	Camber angle	-6¢±45¢
	Caster angle	6°36¢± 45¢
	Toe-in angle (total toe-in)	12¢±12¢
	King pin inclination	12°48¢± 45¢
Rear Wheel	Camber angle	-33¢±45¢
	Toe-in angle (total toe-in)	10¢±12¢

Wheels and Tyres

Wheel Rim Size	6.5J×18	7.0J×19
Tyre Size	215/60 R18 98V	225/55 R19 99V

Spare Tire*	Wheel Rim Size	3.5J×18
	Spare Tire Size	T135/80 R18 104M

Tyre Pressures (Cold)

Gasoline Vehicle

Wheels	Unladen Condition
Front Wheel	230 kpa/ 2.3 bar/ 34 psi
Rear Wheel	230 kpa/ 2.3 bar/ 34 psi
Spare Wheel*	420 kpa/ 4.2 bar/ 60 psi

PHEV/HEV

Wheels	Unladen Condition
Front Wheel	250 kpa/ 2.5 bar/ 37 psi
Rear Wheel	250 kpa/2.5 bar/ 37 psi
Spare Wheel*	420 kpa/ 4.2 bar/ 60 psi